This is a digital copy of a book that was preserved for generations on library shelves before it was carefully scanned by Google as part of a project to make the world's books discoverable online.

It has survived long enough for the copyright to expire and the book to enter the public domain. A public domain book is one that was never subject to copyright or whose legal copyright term has expired. Whether a book is in the public domain may vary country to country. Public domain books are our gateways to the past, representing a wealth of history, culture and knowledge that's often difficult to discover.

Marks, notations and other marginalia present in the original volume will appear in this file - a reminder of this book's long journey from the publisher to a library and finally to you.

Usage guidelines

Google is proud to partner with libraries to digitize public domain materials and make them widely accessible. Public domain books belong to the public and we are merely their custodians. Nevertheless, this work is expensive, so in order to keep providing this resource, we have taken steps to prevent abuse by commercial parties, including placing technical restrictions on automated querying.

We also ask that you:

+ *Make non-commercial use of the files* We designed Google Book Search for use by individuals, and we request that you use these files for personal, non-commercial purposes.
+ *Refrain from automated querying* Do not send automated queries of any sort to Google's system: If you are conducting research on machine translation, optical character recognition or other areas where access to a large amount of text is helpful, please contact us. We encourage the use of public domain materials for these purposes and may be able to help.
+ *Maintain attribution* The Google "watermark" you see on each file is essential for informing people about this project and helping them find additional materials through Google Book Search. Please do not remove it.
+ *Keep it legal* Whatever your use, remember that you are responsible for ensuring that what you are doing is legal. Do not assume that just because we believe a book is in the public domain for users in the United States, that the work is also in the public domain for users in other countries. Whether a book is still in copyright varies from country to country, and we can't offer guidance on whether any specific use of any specific book is allowed. Please do not assume that a book's appearance in Google Book Search means it can be used in any manner anywhere in the world. Copyright infringement liability can be quite severe.

About Google Book Search

Google's mission is to organize the world's information and to make it universally accessible and useful. Google Book Search helps readers discover the world's books while helping authors and publishers reach new audiences. You can search through the full text of this book on the web at `http://books.google.com/`

WIDENER LIBRARY
HX GZUY -

S91 1400.155

HARVARD UNIVERSITY.

Bought
with an appropriation made by
the Corporation
for books in Engineering.

Received 22 March, 1901.

SCIENCE CENTER LIBRARY

TRANSACTIONS

OF THE

Institution of Engineers and Shipbuilders

IN SCOTLAND

(INCORPORATED).

VOLUME XLII.

FORTY-SECOND SESSION, 1898-99.

EDITED BY THE SECRETARY.

GLASGOW:
PUBLISHED BY THE INSTITUTION AT
207 BATH STREET.

1899.

MAR 22 1901
LIBRARY.
Engin. Approp.
JUN 20 1917
TRANSFERRED TO
HARVARD COLLEGE LIBRARY

PRINTED FOR THE INSTITUTION BY
WILLIAM ASHER, CENTRAL PRINTING WORKS,
80 GORDON STREET, GLASGOW.

OFFICE-BEARERS.

FORTY-SECOND SESSION, 1898-99

President.

GEORGE RUSSELL.

Vice-Presidents.

ROBERT CAIRD, F.R.S.E. JAMES GILCHRIST.
PROF. W. H. WATKINSON.

Councillors.

PROF. ARCHIBALD BARR, D.Sc.
PROF. AND. JAMIESON, F.R.S.E.
CHARLES C. LINDSAY.
FRANK P. PURVIS.
JAMES WEIR.
ARCHIBALD DENNY.
WILLIAM FOULIS.
MATTHEW HOLMES.
JOHN F. M'INTOSH.
MATTHEW PAUL.

Finance Committee.

GEORGE RUSSELL, *Convener.*
ROBERT CAIRD.
WILLIAM FOULIS.
CHARLES C. LINDSAY.

Library Committee.

FRANK P. PURVIS, HON. LIB., *Convener.*
PROFESSOR AND. JAMIESON.
MATTHEW PAUL.
PROFESSOR W. H. WATKINSON.

Honorary Councillors—Past Presidents.

JAMES M. GALE. HAZELTON R. ROBSON. JOHN INGLIS, LL.D.
SIR WILLIAM ARROL, LL.D., M.P.

House Committee.

From Institution.
GEORGE RUSSELL.
JAMES GILCHRIST.
PROFESSOR AND. JAMIESON.
CHARLES C. LINDSAY.
JAMES WEIR.
EDWARD H. PARKER, *Secretary.*

From Philosophical Society.
DR F. FERGUS.
JOHN ROBERTSON.
J. F. CAMPBELL.
GILBERT THOMSON.
JOHN MANN, *Treasurer.*

Committee on Papers

PROFESSOR ARCHIBALD BARR.
ROBERT CAIRD.
CHAS. C. LINDSAY.
PROFESSOR W. H. WATKINSON.

Representatives on the Board of Trade Consultative Committee.

CHARLES CONNELL.
JAMES DENNY.
JAMES HAMILTON.
JAMES WEIR.

Representatives on Lloyd's Technical Committee.

SINCLAIR COUPER.
JAMES GILCHRIST.
FRANK P. PURVIS.
JOHN WARD.

Representative on the Board of Governors of the Glasgow School of Art.

JAMES MOLLISON.

Representative on the Board of Governors of the Glasgow and West of Scotland Technical College.

JOHN WARD.

Honorary Treasurer—JAMES M. GALE, City Chambers, John Street.

Secretary and Editor of Transactions—EDWARD H. PARKER, Institution Rooms, 207 Bath Street.

Curator and Librarian—FRANCIS MARTIN, Institution Rooms, 207 Bath Street.

PRESIDENTS OF THE INSTITUTION

Since Foundation in 1857.

1857-59 WILLIAM JOHN MACQUORN RANKINE, C.E., LL.D., F.R.SS.L. & E., Professor of Civil Engineering and Mechanics, Glasgow University.

1859-61 WALTER MONTGOMERIE NEILSON, Hyde Park Locomotive Works, Glasgow.

1861-63 WILLIAM JOHNSTONE, C.E., Resident Engineer, Glasgow & South-Western Railway, Glasgow.

1863-65 JAMES ROBERT NAPIER, Engineer and Shipbuilder, Glasgow.

1865-67 JAMES GRAY LAWRIE, Engineer and Shipbuilder, Glasgow.

1867-69 JAMES MORRIS GALE, C.E., Engineer, Glasgow Corporation Water Works.

1869-70 WILLIAM JOHN MACQUORN RANKINE, C.E., LL.D., F.R.SS.L. & E., Professor of Civil Engineering and Mechanics, Glasgow University.

1870-72 DAVID ROWAN, Marine Engineer, Glasgow.

1872-74 ROBERT DUNCAN, Shipbuilder, Port-Glasgow.

1874-76 HAZELTON ROBSON ROBSON, Marine Engineer, Glasgow.

1876-78 ROBERT BRUCE BELL, Civil Engineer, Glasgow.

1878-80 ROBERT MANSEL, Shipbuilder, Glasgow.

1880-82 JOHN LENNOX KINCAID JAMIESON, Marine Engineer, Glasgow.

1882-84 JAMES REID, Hyde Park Locomotive Works, Glasgow.

1884-86 JAMES THOMSON, LL.D., F.R.S., Professor of Civil Engineering and Mechanics, Glasgow University.

1886-87 WILLIAM DENNY, Shipbuilder, Dumbarton.

1887-89 ALEXANDER CARNEGIE KIRK, LL.D., Marine Engineer, Glasgow.

1889-91 EBENEZER KEMP, Marine Engineer, Glasgow.

1891-93 ROBERT DUNDAS, C.E., Resident Engineer, Southern Division, Caledonian Railway, Glasgow.

1893-95 JOHN INGLIS, LL.D., Engineer and Shipbuilder, Glasgow.

1895-97 Sir WILLIAM ARROL, LL.D., M.P., Engineer and Bridge Builder Glasgow.

1897-99 GEORGE RUSSELL, Mechanical Engineer, Motherwell.

Elected Aprl 25, 1899. ROBERT CAIRD, F.R.S.E., Shipbuilder, Greenock.

CONTENTS.

PAGE

Office-Bearers, ... iii

Summer Meeting at Sheffield, ... 1
Local Reception Committee, ... 1

PAPERS READ.

The Problem of Combustion in Water-Tube Boilers and a Means of its Solution—by Mr James Weir, ... 12
The Transmission of Heat through Plates from Hot Gases to Water—by Mr George Halliday, Wh.Sc., ... 41
The Internal Architecture of Metals—by Professor John Oliver Arnold, ... 75
Inaugural Address—by the President, Mr George Russell, .. 93
Feed-Water Filters—by Mr A. E. Shute, ... 109
Meters and Systems of Charging for Electric Energy—by Mr William Arnot, ... 146
M. Tchebycheff's Formula—by Professor J. Harvard Biles, ... 176
Examples of Four-Crank Engines and their Auxiliaries—by Mr John Thom, ... 213
The Mechanics of the Centrifugal Machine—by Mr C. A. Matthey, 232
The Machinery of the Clyde Trustees' No. 3 Graving Dock—by Mr George H. Baxter, ... 267
Comparisons of Similar Structures and Machines—by Professor Archibald Barr, D.Sc., ... 322

"James Watt" Anniversary Dinner, ... 361
Minutes of Proceedings, ... 372
Election of Office-Bearers, ... 382
Report of the Council, ... 385
Treasurer's Statement, ... 388
Report of the Library Committee, ... 393
Donations to Library, ... 393
New Books added to Library, ... 394

PAGE
Obituary, ... 402
List of Members, ... 413
Index, ... 455

PLATES.

Map of Sheffield, ... I.
The Problem of Combustion in Water-Tube Boilers and a Means of its Solution, ... II.
The Transmission of Heat through Plates from Hot Gases to Water, III.
Feed-Water Filters, ... IV., V.
Meters and Systems of Charging for Electric Energy, ... VI., VII.
M. Tchebycheff's Formula, ... VIII.
Examples of Four-Crank Engines and their Auxiliaries, .. IX., X.
The Mechanics of the Centrifugal Machine, ... XI., XII.
The Machinery of the Clyde Trustees' No. 3 Graving Dock, XIII., XIV., XV., XVI., XVII., XVIII., XIX.
Comparisons of Similar Structures and Machines, ... XX.

PREMIUMS AWARDED

FOR

PAPERS READ DURING SESSION 1897-98.

PREMIUMS OF BOOKS.

To Mr T. R. MURRAY, for his paper on "The Theory and Practice of Mechanical Refrigeration."

To Professor E. J. MILLS, D.Sc., F.R.S., for his paper on "Photo-Surveying."

To Mr F. J. ROWAN, for his paper on "Water-Tube Boilers."

To Mr G. GRETCHIN, for his paper on "Notes on the Belleville Boilers of the T.S.S. 'Kherson.'"

ADVERTISEMENT.

The responsibility of the statements and opinions given in the following Papers and Discussions rests with the individual authors; the Institution, as a body, merely places them on record.

ERRATA.

Page 72, line 33, *for* "Maratime" *read* "Maritime."
Page 116, line 23, *for* "suction side-filter" *read* "suction-side filter."
Page 133, top, *for* "Mr William Rigg" *read* "Mr Anthony Harris.'
Page 260, The direction of the arrow on the right hand of Fig. 14 should be reversed.

INSTITUTION

OF

ENGINEERS AND SHIPBUILDERS

IN SCOTLAND

(INCORPORATED).

FORTY-SECOND SESSION, 1898-99.

SUMMER MEETING.

SEE PLATE I.

A SUMMER MEETING of the Institution was held in Sheffield on Wednesday, 15th June, 1898, and two following days.

The following important body of gentlemen, who formed the Local Reception Committee at Sheffield, made the most hospitable arrangements for the reception and entertainment of the Members of the Institution, and rendered valuable services in promoting the success of the meeting:—

LOCAL RECEPTION COMMITTEE AT SHEFFIELD.

(Those marked with an asterisk constituted the Executive Committee.)

Chairman.

*The Right Honourable the Lord Mayor of Sheffield,
Alderman GEORGE FRANKLIN.

Vice-Chairman.

*Sir ALEXANDER WILSON, Bart.,
Messrs Charles Cammell & Co., Limited, Cyclops Works.

Honorary Treasurer.

W. F. OSBORN, Esq.,
Messrs Samuel Osborn & Co., Clyde Steel and Iron Works, Wicker.

Honorary Secretary.

*Prof. F. W. HARDWICK, University College, Sheffield.

Sir CHARLES SKELTON, Sheaf Bank Works, Heeley.

C. E. ELLIS, Esq., Messrs John Brown & Co., Limited, Atlas Works.

*J. ROSSITER HOYLE, Esq., Messrs Thomas Firth & Sons, Limited, Norfolk Works.

J. W. PERCIVAL, Esq., Messrs Charles Cammell & Co., Limited, Cyclops Works.

WILLIAM FROST, Esq., Messrs Vickers Sons & Maxim, Limited, River Don Works.

H. H. ANDREW, Esq., Messrs J. H. Andrew & Co., Limited, Toledo Steel Works.

JOHN RODGERS, Esq., Messrs Joseph Rodgers & Sons, Limited, Norfolk Street.

SAMUEL OSBORN, Esq., Messrs Samuel Osborn & Co., Clyde Steel and Iron Works, Wicker.

*Colonel J. E. BINGHAM, Messrs Walker & Hall, Howard Street.

CHARLES HENRY BINGHAM, Esq., Messrs Walker & Hall, Howard Street.

*W. F. BEARDSHAW, Esq., Messrs J. Beardshaw & Son, Limited, Baltic Steel Works, Effingham Road.

JOSEPH JONAS, Esq., Messrs Jonas & Colver, Limited, Continental Steel Works, Attercliffe.

*ROBERT COLVER, Esq., Messrs Jonas & Colver, Limited, Continental Steel Works, Attercliffe.

CHARLES DAVY, Esq., Messrs Davy Bros., Limited, Park Iron Works.

F. W. SEAMAN, Esq., Messrs Hobson, Seaman & Co., Don Steel Works.

W. ATKINS, Esq., Reliance Steel Works, Bessemer Road, Attercliffe.

W. TYZACK, Esq., Messrs Needham, Veal, & Tyzack, Eye Witness Works.

J. GRAYSON LOWOOD, Esq., Five Oaks, Sheffield.

J. A. CRAVEN, Esq., Messrs Cravens, Limited, Darnall.

C. A. R. JOWITT, Esq., Messrs Thos. Jowitt & Sons, Scotia Works.
H. K. PEACE, Esq., Messrs W. K. & C. Peace, Eagle Works.
G. W. HAWKSLEY, Esq., Messrs Hawksley, Wild & Co., Savile Street, East.
GEORGE SENIOR, Esq., Messrs George Senior & Sons, Limited, Ponds Forge.
ALFRED BECKETT, Esq., Messrs Alfred Beckett & Sons, Brooklyn Works.
*ROBERT SCHOTT, Esq., Messrs Seebohm & Dieckstahl, Dannemora Steel Works.
THOMAS WILKINSON, Esq., Messrs William Cook & Co., Limited, Tinsley.
E. DICKINSON, Esq., Messrs The Hardy Patent Pick Co., Limited, Heeley.
J. STANLEY WATSON, Esq., Messrs J. J. Saville & Co., Germania Works.
JOHN SUTTON, Esq., Messrs Leadbeater & Scott, Penistone Road.
H. LINLEY HOWLDEN, Esq., Messrs Mappin & Webb, Norfolk Street.
Dr HICKS, F.R.S., Principal of University College, Sheffield.
*Professor WILLIAM RIPPER, University College, Sheffield.
Professor JOHN OLIVER ARNOLD, University College, Sheffield.
C. H. GILBERT HAY, Esq., Messrs Hay & Sons, Norfolk Street.
CHARLES F. WIKE, Esq., Borough Surveyor, Town Hall.
*R. HEBER RADFORD, Esq., 15 St. James' Row.
GEORGE ADDY, Esq., Waverley Works, Effingham Road.
T. DAVAGE, Esq., Messrs Thos. Firth & Sons, Limited, Norfolk Works.
J. F. MOSS, Esq., School Board Offices, Leopold Street.

The following programme of Meetings, Entertainments, and Excursions was supplied to the Members:—

PROGRAMME OF PROCEEDINGS.

TUESDAY, 14TH JUNE.

A special express train to Sheffield will leave Glasgow (St. Enoch's, Platform No. 6) on Tuesday, 14th June, at 11-45 a.m., stopping at Kilmarnock to take up passengers. A halt of thirty-five minutes will be made at Carlisle for luncheon. Departing from Carlisle at 2-45 p.m., the train will reach Sheffield at 6-15 p.m.

WEDNESDAY, 15TH JUNE.

9-0 a.m.—Secretaries' Office open at the Cutlers' Hall.

9-45 a.m.—Reception of the President (George Russell, Esq.), and the Council and Members of the Institution at the Cutlers' Hall, by the Lord Mayor of Sheffield (Alderman Franklin), The Master Cutler, and other Members of the Local Reception Committee.

10-0 a.m.—Meeting at the Cutlers' Hall, Church Street, for the reading and discussion of the following papers—George Russell, Esq., President, in the chair:—

"*The Problem of Combustion in Water-Tube Boilers, and a Means of its Solution,*" by Mr JAMES WEIR (Member of Council).

"*The Transmission of Heat through Plates from Hot Gases to Water,*" by Mr GEORGE HALLIDAY, Wh. Sc. (Associate).

Professor JOHN OLIVER ARNOLD, of the University College, Sheffield, will deliver a Lecture on "*The Internal Architecture of Metals*" (Illustrated).

12-45 p.m.—Luncheon at the Cutlers' Hall, on the invitation of the Reception Committee. (Ladies invited).

1-30 p.m.—Vehicles will be in attendance at the Cutlers' Hall to convey parties to and from the following Works:—

	No. on Map.
A.—The Cyclops Works of Messrs Charles Cammell & Co., Limited.	13
B.—The Atlas Works of Messrs John Brown & Co., Limited.	14
C.—The Electro-Plating Works of Messrs Walker & Hall. (Ladies invited).	15

7-0 p.m.—Institution Dinner at the Cutlers' Hall. (Evening Dress).

THURSDAY, 16TH JUNE.

9-0 a.m.—Secretaries' Office open at the Cutlers' Hall.

9-30 a.m.—Vehicles will be in attendance at the Cutlers' Hall, to convey parties to and from the following Works:—

	No. on Map.
A.—The Norfolk Works of Messrs Thomas Firth & Sons, Limited.	16
B.—The River Don Works of Messrs Vickers, Sons, & Maxim, Limited.	17
C.—The Cutlery Works of Messrs Joseph Rodgers & Son, Limited, and The Electro-Plating Works of Messrs Mappin & Webb. (Ladies invited).	19
D.—The Clyde Steel and Iron Works of Messrs Samuel Osborn & Co., and	20, 20*a*, and 20*b*.
The Dannemora Steel Works of Messrs Seebohm & Dieckstahl	21

12-20 p.m.—Luncheon at the Cutlers' Hall, on the invitation of the Reception Committee. (Ladies invited).

1-30 p.m.—*A special train will leave Sheffield (Victoria Station) at 1-30 p.m., arriving at Worksop at 1-55 p.m. Carriages and other conveyances will be in attendance at Worksop Station to convey the passengers to Welbeck Abbey, the seat of His Grace the Duke of Portland. Visitors will be admitted to the Pleasure Grounds, Gardens, Riding School, Tan Gallop, etc. Tea will be served in the Riding School. The special train will leave Worksop at 6-20 p.m., arriving at Sheffield at 6-50 p.m.

9-0 p.m.—Reception in the Town Hall, Pinstone Street, by invitation of the Lord Mayor of Sheffield and Lady Mayoress. (Ladies invited — Evening dress).

FRIDAY, 17TH JUNE.

9-0 a.m.—Secretaries' Office open at the Cutlers' Hall.

10 a.m.—(A)* All-day excursion to Bakewell, Haddon Hall, and Chatsworth. Carriages and Conveyances will leave the Cutlers' Hall at 10 a.m., and on arrival at Bakewell, luncheon will be served at the Rutland Arms Hotel. After luncheon, the same conveyances will be in attendance to drive to Haddon Hall, the property of His Grace the Duke of Rutland. Thereafter visitors will be driven to Chatsworth, the principal residence of His Grace the Duke of Devonshire, to see the House, Gardens, etc. Dinner will be served at the Baslow Hydropathic at about 6-15 p.m. The carriages and conveyances will leave Baslow for Sheffield at about 7-30 p.m.

* At Welbeck and Haddon Hall, a nominal fee is charged for admission, the proceeds being distributed amongst local charitable institutions.

1-30 p.m.—(B)* Afternoon excursion to Chatsworth, to allow Members, who may desire, to visit works in the morning. Conveyances will leave the Cutlers' Hall at 1-30 p.m. for Chatsworth. Dinner will be provided at the Baslow Hydropathic at about 6-15 p.m. Party B will leave Baslow for Sheffield at the same hour as party A.

The Excursions arranged for each day, and distinguished by letters of the alphabet, are alternative.

SATURDAY, 18TH JUNE.

A special express train to Glasgow will leave Sheffield at 9-50 a.m., halting at Carlisle for 35 minutes, where refreshments will be served. A stop will be made at Kilmarnock to set down passengers. Time of arrival at Glasgow, 4-20 p.m.

The following works are open to Members of the Institution on the days, and at the times, specified below, on the production of a card of invitation.

Members who propose visiting any of the works which have a definite time fixed for the visit, are requested to signify their intention to the Secretaries not later than Wednesday morning, June 15th.

WEDNESDAY AFTERNOON.

Messrs William Cooke & Co., Limited, Tinsley.

Makers of Wire Ropes, Rods, Horse Shoes, Pig Iron, Iron and Steel Bars. 2 to 4 p.m.

---

* At Chatsworth, a nominal fee is charged for admission, the proceeds being distributed amongst local charitable institutions.

Messrs Hawksley, Wild, & Co., Savile Street East.
Manufacturers of Steam Boilers, Engine Fittings, Feed-Water Heaters, and Flanging work. 2 to 4 p.m.

THURSDAY.

Messrs J. Grayson Lowood, & Co., Limited, Deepcar.
Gannister Merchants, Silica and Fire Brick Manufacturers. 2 to 5 p.m.

Messrs The Silica Fire Brick Co., Limited, Oughtibridge.
Morning or Afternoon.

FRIDAY MORNING.

Messrs J. H. Andrew & Co., Limited, Toledo Steel Works, Neepsend. Manufacturers of Steel, Files, Springs, etc., Tilters and Forgers. 11 a.m. to 12 noon.

Messrs Sir Charles Skelton & Co., Sheaf Bank Works, Heeley.
Manufacturers of Spades, Shovels, Forks, Hammers, and Edge Tools. 10 a.m. to 12-30 p.m.

Messrs The Hardy Patent Pick Co., Limited, Mining Tool Works, Heeley. Manufacturers of Picks, Shovels, Spades, Forks, Mining and Quarrying Tools. 10 a.m. to 1 p.m.

THE SUBJOINED WORKS MAY BE VISITED ON ANY DAY.

Messrs J. Beardshaw & Son, Limited, Baltic Steel Works, Effingham Road, Manufacturers of Profile Steel for Tools, Saws for Hot and Cold Iron, etc. Any time.

Messrs Alfred Beckett & Sons, Brooklyn Works, Green Lane.
Manufacturers of Steel, Files, Saws, Machine Knives, etc. Any time.

Messrs Thos. Jowitt & Sons, Scotia Works.
Manufacturers of Steel, Files, and Engineers' Tools. Any time.

Messrs Leadbeater & Scott, St. Mary's Works, Penistone Road.
Manufacturers of Steel, Files, Hammers, and Castings; and Wire Drawers. Any time.

Messrs W. K. & C. Peace, Eagle Works, Mowbray Street.
Manufacturers of Steel, Files, Edge Tools, Scythes, Machine Knives, Cast Steel Hammers, etc. Any day, except between 1 and 2 p.m.

Messrs J. J. Saville & Co., Germania Works, Shoreham Street.
Manufacturers of Steel, Files, and Mill Tools. Any day, 10 a.m. to 12 noon, and 3 to 5-30 p.m.

Messrs George Senior & Sons, Limited, Sheaf Street.
Shear Steel Manufacturers, Tilters and Forgers, Converters. Any time.

Messrs Moss & Gamble Brothers, Franklin Works, Russell Street.
Manufacturers of Files, Saws, and Tools. Any time.

PROCEEDINGS.

The Proceedings of the Summer Meeting opened in the Cutlers' Hall, Sheffield, on Wednesday, June 15th, at 9-45 a.m., when the President, Council, and Members, were received by the Lord Mayor, Alderman George Franklin, and the Master Cutler, Sir Alexander Wilson, Bart.

The LORD MAYOR said the visit of the Institution had been keenly anticipated by Sheffield people, and he hoped that the result of the visit would be such as to enable its members to take away pleasant recollections. The Clyde had long been noted, and had a world-wide reputation, for the excellence of its manufactures in both engineering and shipbuilding—a reputation worthy of the birthplace of James Watt, whose scientific skill and genius and investigations had done so much to make the whole world indebted to that immortal engineer. Sheffield had very much in common with the cities on the Clyde, in that she was trying to provide the armour with which to clothe the ships built on the Clyde. He was not claiming too much for the citizens of Sheffield when he said they

were determined to maintain against all comers the excellent reputation they had deservedly gained in that respect. The science which governed methods of production was constantly developing new phenomena, and this necessitated the establishment of what might be called a pioneer department in every large manufacturing concern. That gathering might be considered to be a meeting of pioneers—those present were the sappers and miners, and the advance guard of a greater army of scientific thinkers and skilful workers, who would shortly occupy the markets of the world. Nothing but good could come of meetings of that description—not only immediate good to the members personally, but a greater and more lasting good to the great body of the people as a whole. Sheffield had recently had the misfortune to lose by death the Master Cutler, who represented the commercial interests of the City, but in those unfortunate circumstances nothing could be more happy than to have joining with him in welcoming the Institution, Sir Alexander Wilson, a past Master Cutler, who had consented to occupy his old position until September next.

The MASTER CUTLER said it afforded him very great pleasure, on behalf of the Cutlers' Company and the commercial interests of the city, to join in a hearty and sincere welcome. They would see in Sheffield a great deal worth seeing, as ought to be the case in a city where the finest steel in the world was made.

The PRESIDENT (Mr George Russell) desired on his own behalf and on behalf of the members of the Institution generally, to offer their best thanks for the very enthusiastic welcome accorded to the Institution. They did not anticipate being received with so much ceremony when it was arranged to visit Sheffield.

The SECRETARY read the minutes of the previous meeting, which were approved and signed by the President, who thereafter called upon Mr John Ward to propose a vote of thanks.

Mr WARD moved a resolution of thanks to the Lord Mayor, Lady Mayoress, the Master Cutler, and the Reception Committee for their right royal welcome. During the 41 years of the Institution's existence the members claimed to have done a good deal of quiet and

unostentatious work, and in the doing of it they had preferred to stay at home. This was only the second occasion on which they had cared to leave home and lay themselves open to what ill-natured critics might say was a course of giddiness and dissipation. But they were now beginning to think it was time they broke down their clannishness and conservatism, and that good would result by visiting other places and meeting captains of industry who were doing the world's work in industrial centres. And so when it was suggested that they should visit Sheffield they unitedly said "Yes," and they and the partners of their joys and sorrows looked forward with confidence to a very pleasant and enjoyable outing. The Lord Mayor had honoured them by personally welcoming them, and he and the Lady Mayoress were joining in warm hospitality to them, and the Master Cutler had honoured them by allowing the use of that historic hall. As to the Reception Committee, might they and their energetic secretary, Professor Hardwick, live long and prosper. Their warmest thanks were also due to the gentlemen who were allowing them to visit works whose reputation had for years been as familiar as household words. Their visit to Sheffield would result in the forming of new friendships, which would last long after the pleasant associations of the visit had become but a memory, and they would return home with that high opinion always held of Sheffield and its captains of industry intensified.

Mr JAMES MOLLISON seconded the vote of thanks. He said they all felt pleased at the very excellent arrangements which had been made on their behalf by their Sheffield friends. He was sure that many of them had no conception of Sheffield's Industries, and what had been accomplished in the city. No doubt their visit would be fraught with happy remembrances, not only concerning what had been seen but of the kindness of the people of Sheffield.

The resolution was carried with acclamation.

The reading of papers was then proceeded with.

THE PROBLEM OF COMBUSTION IN WATER-TUBE BOILERS, AND A MEANS OF ITS SOLUTION.

By Mr JAMES WEIR (Member).

SEE PLATE II.

Read at Sheffield, 15th June, 1898.

IN adding one more to the already large number of contributions to the literature of the water-tube boiler, the writer calls to mind the statement of an eminent authority on a somewhat different matter, that "it requires a considerable amount of ignorance to speak positively on such a subject." It will, however, be a necessity to speak positively on various points, but, as a corrective in so doing, an endeavour will be made to appeal to the experience of engineers familiar with the types and performances of boilers generally, as the purpose of this paper is practically an application of that experience to new and hitherto unfamiliar conditions.

For a considerable time past, the engineering world has been inundated with designs of new water-tube boilers. Whole families of these boilers have been born, supporting the doctrine of heredity in an unmistakable manner. Phenomenal results have been tabulated and given forth, advantages of many kinds have been claimed, but to all these the great mass of engineering opinion in this country, while conceding here and there a point, has been, on the whole,

inert and unresponsive. In particular the Mercantile Marine, which is always eager to seize on any engineering development likely to affect its balance sheet, has held strangely aloof, and has not yet been, to use the expression of a distinguished Scotchman lost to engineering, "battered into acquiescence" on the subject of water-tube boilers. Exception to the above statement must, of course, be made in the case of the Navy; where, however, the requirements are of a different nature from those which obtain in the Mercantile Marine, and in ordinary industrial spheres. Granting these requirements to be to some extent abnormal; nevertheless, we find that many of the advantages claimed for water-tube boilers are such as, other things being equal, should commend their adoption generally where boiler plant is in use. Their capability for the development of high pressures on a comparatively small weight, their rapidity in raising steam, their ease of transport and erection, all appeal to the commercial sense, upon which, after all, engineering opinion is founded. Why is it then, that with this mass of evidence in its favour, the water-tube boiler has not been more rapidly and more generally adopted in the Mercantile Marine?

Firstly, it may be said, it is on account of the *character* of the evidence, so far as trials and results are concerned. A pound of coal burned in a boiler is capable of producing a certain definite number of units of heat, depending upon its composition and quality, and for any particular boiler the method of burning and the arrangement most suitable for utilising that heat has to be found. When, therefore, we have found these for a particular boiler, we can, on trial, get as good a result from one boiler as from any other. This is a fact which must be taken into account, when considering the high results which have been published of the performances of water-tube boilers; because these results have been obtained by the most careful manipulation, and under the most favourable conditions, specially studied and arranged for the boiler under trial. That such results have been obtained, and can be obtained, is not questioned, but the point is that they have been obtained under conditions, and by attention which are quite outside the range of everyday working.

It is not on exhibition results of this kind that the commercial man, looking for some improvement in his boiler plant, bases his calculations and forms his opinion, but on lengthy and continuous trials under the actual conditions of his work.

Secondly, leaving aside all considerations of design, we may state broadly that *low efficiency* on continuous working is the next feature which has chiefly militated against the adoption of the water-tube boiler. This is specially the case in the Mercantile Marine, where continuous economical working is a primary necessity.

In seeking the reason for this, the common failing of water-tube boilers, we will consider first of all the conditions which must be fulfilled in boilers not of the water-tube type, in order to give good results, conditions which experience has made familiar to most engineers. We may say that, to make a good steam boiler, the following points must have attention :—

1. Good combustion must be obtained.
2. The heating surface must be sufficient to take up the heat.

Taking the first point, if we examine how the combustion is carried out in the most economical boilers, we find that in all boilers which give good results the combustion is carried out in the same manner. As a typical example, we shall take the marine return-tube boiler. Here we have, first, the furnace, in which the coal is burned and the inflammable gases produced. Next, we have the bridge, over which the gases pass together with the air, either admitted at the front or through the grate near the bridge, generally at both places. The function of the bridge is to reduce the opening through which the gases and the air must pass into the combustion chamber. The effect of reducing the opening is to accelerate the speed of the gases passing through the opening, with the result that, when they enter the large space behind the bridge, eddies and whirling motions are set up which thoroughly mix the air and gases, and combustion is the result. Next we have this space behind the bridge, namely, the combustion chamber, in which the gases are

burned. To obtain good results, it is absolutely necessary that both the furnace and combustion chambers should be properly arranged; the furnace must have sufficient room above and below the fire grate, and the combustion chamber must be large enough to deal with the volume of gases passing through it. Nevertheless, with a well-proportioned furnace and a sufficiently large combustion chamber, good results will not be obtained unless the bridge opening or passage between them be properly arranged. This point need scarcely be further insisted upon, as it is a well-known fact that the efficiency of every boiler depends a great deal on the proper proportion and arrangement of bridge and combustion chamber.

If we wish to test the effect of modifying the bridge and combustion chamber in one of these economical boilers, let us, for example, refer to the boilers shown in Figs. 3, 4, and 5. In Fig. 3 we have the grate bars carried right back into the combustion chamber, with the bridge-wall at the back. In this case, the combustion chamber is for all practical purposes converted into a flue for leading the air and gases to the tubes. The effect of this construction is that the air and gases do not mix at all until they reach the uptake, where combustion will take place if they become ignited. When the fuel is consumed in this manner we may expect to burn, in ordinary working conditions, say 2 lbs. of coal per I.H.P. per hour. By simply shifting the bridge-wall forward into the furnace, as in Fig. 4, the air and gases passing through the narrow opening over the bridge-wall will have their speed accelerated, and when they enter the large open space mixing will take place, and the better they are mixed the more complete will be the combustion. With conditions similar to those in the first case, but with this alteration on the bridge-wall we may expect to burn 1·6 lbs. of coal per I.H.P. per hour. In Fig. 5 we have again increased the size of the combustion chamber by curtailing the length of the grate, and under the same conditions as in the previous case we will only burn 1·4 lbs. per I.H.P. per hour. Various explanations have been given to account for this result, but these need not be detailed. The writer is of opinion that the correct reason is to be found in the increased size

of the combustion chamber, and the manner in which the air and gases are practically tumbled over the bridge, so as to mix and ignite before passing through the heating tubes.

In all economical types of land boilers, as, for example, the Lancashire boiler, the combustion is carried out in exactly the same way as described; and the means are also similar, viz., the furnace, the bridge, and the combustion chamber—the latter being in a line horizontal with the furnace instead of vertical, as in the case of the marine return-tube boiler. We have still a fairly economical boiler in the Locomotive type, on railway work, and in it also we find the same features reproduced, the bridge which divides the fire-box providing the combustion chamber over the furnace.

Let us next consider the second point, viz., the heating surface. It may safely be said that all good water-tube boilers, of whatever type, have sufficient heating surface, though in some the heating surface is more efficient than in others. The value of the heating surface in all boilers depends on the uniform passages of the gases over or in contact with it. Now, in most water-tube boilers we find that the area between the tubes is too great, and the result is the same as making the area through the tubes too great in a return-tube boiler. This would be a recognised defect in an ordinary boiler, but in one of the water-tube type, to remedy this alone would scarcely add anything to the efficiency, as it is a primary defect which must be rectified before the gases meet the tubes.

It will be instructive if we now consider for a moment the combustion in the case of water-tube boilers generally. In practically all water-tube boilers the process of burning the coal and gases is carried out in a single chamber, viz., the furnace. In some boilers the space over the furnace is large, with a view to utilising it as a combustion chamber. Now, this large space over the fire is intended to do the duty of mixing the air and gases, so that they may combine and burn, but to do this it must receive the air equally all over the fire through the grate. For the purpose of

attaining this in even an ordinary measure, great care and training on the part of the stokers is necessary, as every increase or diminution in the rate of steaming, or the size of the coal, makes an increase or diminution in the thickness of fire necessary. If by careful stoking the mixing and combustion of the air and gases be actually attained, the temperature of the furnace will be equal to that of a well-designed puddling furnace, with the result that the boiler is subjected to conditions far more severe than those under which any ordinary good type of boiler ever works, or should work. It is worse than useless to admit air at the back, front, or sides of the furnace, as it will not mix with the gases, but simply shape its course straight for the nearest passage between the tubes to the funnel, and set fire to the gases there if they are sufficiently hot to ignite. In water-tube boilers of another type, where it has evidently been found to be a difficult matter to let the proper quantity of air through the grate, air-compressing pumps are employed to throw jets of air over the fires, and so bring about the mixture with the combustible gases. Even with these appliances, and with trained stokers, the danger of converting the uptake into a combustion chamber is considerable. There is one important lesson, however, to be learned from combustion as it occurs in existing water-tube boilers, viz.: that the tubes will stand this enormous heat generated in contact, and even although complete combustion is not attained, the temperature in this type is much higher than is ever attained in an ordinary furnace or combustion chamber.

We have now considered the reason of the low efficiency in water-tube boilers, and we have also found in ascertaining the properties which secure efficiency, that there is a common property of all economical boilers which is absent in that of the water-tube type; viz., efficient combustion. We are therefore led to ask, can we not, by adopting similar means in a water-tube boiler, bring about a similar efficiency to that obtained in those economical types of boilers.

This the writer has endeavoured to do, and he submits the "Weir" water-tube boiler as the practical answer to this question.

It consists, like many other water-tube boilers, of an upper steam drum and a lower water drum or drums, connected by tubes, but differentiated from others by the arrangement of a secondary combustion chamber A between the tubes, having an inlet and outlet so arranged as to effect the complete admixture of the air and gases, and thus obtain combustion before passing over the major portion of the heating surface of the boiler. In this boiler the writer has endeavoured to reproduce the phenomena of combustion in the same manner as these phenomena occur in the best marine return-tube boilers, and after continuous trial he feels justified in submitting this arrangement as a solution of the problem of combustion in water-tube boilers.

In this paper it is not intended to describe the details of the boiler, but merely the evolution of the leading feature of the design, and accordingly it has been considered sufficient to give only one form of the boiler in illustration.

Figs. 1 and 2 show the arrangement of a boiler suitable for a light draught channel steamer. It can, however, be adapted for practically any requirements, land or marine. In all cases the combustion is carried out as in the marine return-tube boiler, and it is fired in exactly the same way. It has, however, this advantage, that the stoker can look into the combustion chamber A through an aperture B provided for this purpose, and from the colour of the flame at the bridge opening C he can see if the necessary amount of air is being admitted, and if not he can increase the supply by adjusting the opening of the furnace door. By this adjustment the gases can be effectually burned with the minimum amount of air, in order to suit any rate of steaming, condition of fire, or quality of fuel. As a matter of actual practice, attention may be drawn to the fact that when the combustion chamber A is placed over and separated from the furnace D by the bridge wall E, it has been found that the most effective place to admit the air is through the furnace door, and not at the back of the furnace as is the case in most boilers. It may appear as if this were a departure from the arrangement in the marine return-

tube boiler which we are endeavouring to reproduce, but a little consideration will show that it is analogous to that which obtains in that type. In this boiler the gases from the fire pass through below the bridge wall E, the air passing over and between them and the wall. In the return-tube boiler the gases pass over the bridge wall, and the air which is admitted below them passes between them and the wall. It will thus be seen that the only difference lies in the bridge wall being inverted, which accounts for the apparent dissimilarity.

In addition to this special feature; viz., the complete combustion of the fuel, other points of advantage might also be mentioned; the ease of feeding, which requires no more attention than is necessary with a Scotch boiler; the independence of automatic complications; the general simplicity of construction, which enables the boiler to be made in large units of from 2,000 to 4,000 I.H.P.; the ease of stoking, etc.; but the scope of this paper does not permit these to be spoken of at length.

Having shown, however, the manner in which complete combustion is obtained in the "Weir" boiler, attention may be drawn to two most important results which follow thereon:—

1. The complete absence of smoke.
2. The suitability of the boiler for burning practically any kind of coal, and giving good results.

The ease with which complete combustion is obtained, by regulating the air supply according to the colour of the flame in the combustion chamber, has the effect of entirely preventing the production of smoke. In actual working, without special care, the stoker an entirely untrained man, and using small bituminous coal as fuel, only a slight vapour can be seen to leave the chimney, and thick black smoke is entirely unknown. The importance of this advantage for power plants installed in thickly populated centres, is so obvious as not to require insisting upon, and as it is obtained without expenditure in the shape of special stoking or blowing arrangements, but simply as a resultant effect of correct design, the gain is two-fold.

With regard to the second point, it is obtained by the same means as the first and is practically a corollary of the first, and it is mentioned, not as a mere logical sequence, but as a result of actual everyday working. The different qualities of coal obtained abroad require the most careful consideration by superintendents of the Mercantile Marine, and largely affect the earning power of vessels in various ways. A boiler, therefore, which is capable of taking the utmost out of any kind of coal, and that without any extra attention other than the observation of flame in the combustion chamber, has an advantage which is bound to affect most favourably the voyage account of any vessels so fitted.

Let us consider for a moment how the points which we have just mentioned are applicable to the needs of H.M. Navy. It is unnecessary to point out the great importance, from a naval point of view, of preventing the emission of smoke. To secure this advantage the Admiralty has sacrificed much in times past. It has adopted hand-picked Welsh coal as the standard coal for the Navy, considering it to be the most suitable for its purpose.

Conceding without question to the Belleville boiler, and to small-tube boilers adopted for H.M. Navy, the various advantages which are claimed for them, it is submitted that on this single point of the production of smoke they are far from satisfactory. It is impossible to gainsay this, as it is common to the experience of every engineer who has been associated with the vessels of H.M. Navy fitted with these boilers, and observed their performances. These results, be it noted, are obtained when using Welsh coal, which, according to all experience, is least capable of producing smoke. In the adoption of water-tube boilers then, with their various advantages, the Admiralty have lost this advantage—one which hitherto they have endeavoured to obtain at enormous cost, and one which, from a strategic point of view, is of the greatest importance.

With reference to the second point, the capability of this boiler for burning practically any kind of coal, reference has just been made to the expense to which the Admiralty has gone by the

adoption of Welsh coal, and it may be pointed out that a great portion of this is entailed by the provision, at the various naval bases abroad, of adequate supplies of this coal. Attention has also been drawn in other quarters to the fact that in time of war the sphere of operations of the Navy will be, to a great extent, limited by the maintenance and quantity of these supplies. The adoption of water-tube boilers has greatly intensified this dependence, as it is a well-known fact that without the use of the best hand-picked Welsh coal, the results of these boilers are, to say the least, disappointing, and many of the advantages—apart altogether from the smoke question—are absolutely discounted.

The coal endurance of a warship is a most important factor in her capabilities as an effective instrument of war; the advantage, therefore, which any vessel possesses in being able to utilise, with good results, any class of coal obtainable at whatever quarter of the globe she may happen to be, must necessarily give her a vast superiority and greatly increase the range of her efficiency.

The Welsh coal strike and the operations of the Spanish-American war are both object lessons which indicate the dependence of a Navy fitted with water-tube boilers, not upon coal alone, but upon one particular kind of coal, and reveal to us a vulnerable point in our national armour.

These are a few examples of the questions affected by the solution of the problem which gives a title to this paper. It has been possible only to indicate them very briefly and in general terms, but it is hoped that their importance is none the less apparent.

It may appear unusual, after describing a means of obtaining economy, that greater stress has not been placed upon the economical results of the arrangement described, and it may seem an unwarrantable omission that no table of results is appended to this paper. A word of explanation as to why these results do not appear may therefore be necessary. Complete combustion of the fuel and the proper utilisation of the heat produced, are necessary to obtain economy in a boiler. Hitherto the first condition has

Mr F. J. Rowan.

been wanting in water-tube boilers, and, as a necessary consequence, the second; the aim of this paper has been to show means by which this complete combustion may be obtained. If these means are successful, and carry with them no disadvantages, then it may be inferred that the boiler will give economical results. It may at once be said emphatically that the means have proved entirely successful, and that the economy due to complete combustion has been obtained.

From the remarks made in a previous portion of the paper, however, it will be gathered that the trials carried out have not been on the ordinary basis which makes possible comparison with published results of boilers worked under special conditions. To fully describe the trials, and present the results in such a manner as not to be misleading, would demand a paper of greater length than this, and to simply publish a table of results without explanation, while it would show the economy obtained, would not by itself show the measure of that economy. It has been deemed preferable, instead of taking a result obtained under the most favourable conditions and exhibiting it as a standard performance, rather, from principles understood and already in operation, to indicate the lines upon which these principles must be applied to a fresh set of conditions, leaving to the consideration of engineers generally whether any points have been advanced in so doing which their experience and judgment do not fully and completely sanction and support.

Correspondence.

Mr F. J. Rowan (Member)—Where combustion in water-tube boilers was carried on by means of an ordinary grate, with or without forced draught, there could be little doubt that Mr Weir's arrangement of a secondary combustion chamber, or space for allowing the gases which were given off from the solid fuel on the grate (*i.e.*, the primary combustion chamber) to be mixed with air and ignited, was on correct lines. But there was a question

of prior importance to that of the necessity for a secondary combustion chamber; namely, — Was the primary combustion chamber, formed by means of the ordinary grate, the best arrangement for conducting the combustion required by boilers? It was not by any means certain that the answer to that question was an affirmative one, and if the grate inside the boiler were abolished, Mr Weir's arrangement of a secondary chamber would be imperilled. Mr. Yarrow, in an excellent paper on boiler construction for forced draught, read before the Institution of Naval Architects some years ago, stated that the fire-doors in a large forced draught boiler were frequently opened, say once in every minute, which in twenty-four hours corresponded to 1440 times, and called attention to the varying expansions and contractions produced by these oft-repeated operations, and the severe molecular strains produced in the boiler thereby. And, as the same cause also operated in seriously reducing the thermic effect obtained from the fuel, and in diminishing the efficiency of the heating surface of the boiler, it was perfectly clear that a better system of combustion apparatus was much wanted. So that when Mr Weir stated as a first condition necessary to a good boiler, that good combustion must be obtained, he left out of sight the important question:—In what form of grate, furnace, or combustion apparatus was it to be obtained? There was nothing necessarily final about an inside grate; on the contrary it had many serious drawbacks, and was on the whole a crude and imperfect contrivance. Mr Weir's arrangement was clearly only submitted as a solution of the problem of combustion in water-tube boilers *with ordinary grates*, and as he spoke from the experience of every-day working, it was on that account somewhat beyond criticism from that point of view.

Discussion.

In the after discussion,

Mr G. GRETCHIN (Member) remarked that Mr Weir had been too modest to point out numerous advantages which his boiler possessed, in addition to those mentioned in the paper. The disposition of

Mr G. Gretchin.
the tubes was an excellent feature of the boiler, and so, too, was the simplicity of construction. The ease in feeding without complicated regulating apparatus, and the simplicity and certainty of the firing arrangements were noteworthy characteristics. In one point—the way in which the brick work had stood—the boiler had been a surprise to him. But the ingenious method Mr Weir had devised of arranging the brick walls of his combustion chamber so that they could not, and did not, become over-heated, was a most important detail. Another matter which appealed very strongly to anyone familiar with the countries where the means of burning liquid fuel were eagerly sought after, was the suitability of the boiler for that purpose, and also for burning bituminous coal, such as they had in the East. He regarded the considerable height of the boiler, its somewhat clumsy shape, and the largeness of its elements as disadvantages, while the great capacity of the steam drum would, in case of accident, mean a great decrease in power of the engine.

Mr J. Mollison (Member) stated that he had had an opportunity of examining the water-tube boiler referred to, while it was being fitted in position, and subsequently, when it had been worked for some months; he witnessed a number of tests and experiments to show how the spaces for the passages and mixing of the air and gases, on leaving the furnaces, should be proportioned and adjusted in order to maintain, under all ordinary conditions of stoking, the most effective and complete combustion, whatever the quality of the coal. From what he had observed there could be no doubt that Mr Weir had succeeded, in a large degree, in accomplishing that end, and had thereby reduced the smoke at the chimney-head to a minimum. That resulted not only in a large saving of power but did away, in a great measure, with the smoke nuisance by which they were all so much affected in such manufacturing centres as Sheffield and Glasgow. The question of combustion and the consumption of smoke had engaged the attention of engineers for many years, and if Mr Weir's paper became the means of a renewed consideration of the subject, on the lines indicated, not only in the case of water-tube

Mr J. Mollison.

boilers, but with other boilers, great benefit would result. Naval authorities would not be altogether dependent on obtaining a smokeless coal as at present. Greater economy would prevail in the Mercantile Marine, and on shore they would be able to breathe a purer and more health-giving atmosphere. Mr Weir certainly deserved the thanks of the Institution for the able way in which he had treated this question, not merely from a theoretical or speculative point of view, but from long, anxious, and costly experiments and trials.

Professor W. RIPPER said Mr Weir claimed to be carrying out in his new boiler the same arrangement as obtained in the ordinary marine boiler, in that he provided a narrow throat bridge, which helped to mix the gases better in the combustion chamber; and no doubt the boiler did fulfil what was claimed for it in that respect. If an ordinary marine boiler had a brickwork lining over the furnace top leading to the bridge, and if the combustion chamber behind the bridge were bricked also, such a boiler would correspond in principle to Mr Weir's arrangement. Here there was a large amount of brickwork over the bars, pretty well covering the tubes exposed to the fire. As Mr Weir would know, brickwork furnaces were not new; they had often been suggested for the purpose of preventing smoke. With Lancashire boilers it had been suggested that there should be combustion in the first instance in the brickwork fireplace, and that the gases should then pass through the boiler, the object being to get a very much more intense combustion and burn the fuel more perfectly. But there was a well-known objection; viz., that the object of generating heat in a furnace was to get it to the water, and the most valuable means of getting it to the water was to present the surface of the liquid to radiated heat. In a furnace covered with brickwork, the heat had to be transmitted to the water by convection rather than by radiation, and there was a great loss thereby in the rate of transmission. It was estimated, with rough accuracy, that perhaps one-half the heat entering the boiler was radiated heat; the other half was convected heat. If the heating surface was sufficiently extended there was no reason why the whole

Prof. W. Ripper.

heat should not be taken up, but with brickwork hiding the most important part of the heating surface the rate of transmission at that particular part was very much reduced. Then in the combustion chamber there was a great deal of brickwork covering what one would have supposed was an important heating surface; and although brickwork would induce high temperature and complete combustion of the gases, yet, of course, that brickwork hid much of the heating surface, and the taking-up of heat would depend entirely upon extension of heating surface. The objection to Mr Weir's boiler on this ground would, he should think, be more serious still if the draught was forced. With forced draught and a large volume of air passing through the flues the time for heat transmission from the gases to the water was less, and the result must be a loss of efficiency, owing to the lack of the means taken in ordinary boilers to transmit heat to the water by radiation. He was not one who believed that very large results in increased efficiency would be obtained by the prevention of smoke. If they prevented smoke they did not necessarily increase the efficiency; and there were no end of cases to prove the contrary. It was well known that the amount of unburnt gases in smoke was proportionately small. In order to prevent smoke, air devices were introduced, which saved perhaps 2 or 3 per cent. of heat by burning the last vestiges of the fuel, but they as often as not introduced a loss of 5 or 10 per cent. through bringing in excessive air. These were little criticisms which occurred to him on the spur of the moment, but he had no doubt that Mr Weir would be able to make his new boiler as successful as the many other things he had put his hands to.

Mr C E. STROMEYER (Member) considered there was nothing in the speed of the gases, but if the grate were surrounded with a non-heating surface the flames would not be cooled at once as was usual in most boilers. Surrounded by a warm envelope, they would be kept hot and allow the combustion to be completed, and not till then would the gases come in contact with the real heating surface. The combustion being complete, no smoke would be produced. It was with that object in view that boilers with

brick combustion chambers were frequently designed, and although they had troubles of their own the combustion appeared to be fairly perfect. Only recently the Manchester Steam Users' Association carried out evaporative tests on such a boiler, and the results showed that there could be no doubt about its economy and smokelessness.

Professor BARR (Member) agreed with Mr Stromeyer in regard to the advantage of having a fire brick chamber. He thought that Mr Weir should have put that forward as one of the most important features—if not, indeed, the most important feature—of his design. A mass of incandescent brickwork in the immediate vicinity of the fire—more especially directly over the fire—was of very great advantage from the point of view of obtaining complete and smokeless combustion. He would venture to disagree with Professor Ripper in regard to the requirement of time for the gases to give up their heat. If a particle of gas struck the tube at all, it would give up its heat instantaneously, and, in order to get the maximum proportion of the particles to strike the tubes, it was best to cause the gases to move as rapidly as possible over the heating surface. Mr Weir's design seemed to him excellent in this respect, inasmuch as he had departed from the more usual custom of leading the gases transversely across the tubes, carrying them longitudinally through among them instead, thus breaking the current up into a number of small streams. By this means a large heating surface was exposed to the gases, while the total cross-sectional area of the current might be comparatively small, and the velocity, therefore, comparatively great for a given rate of combustion.

Mr GEORGE HALLIDAY (Associate) said there could be no doubt that Mr Weir had laid his finger on a difficulty in the water-tube boiler question, when he pointed out that there was no combustion chamber in which the hot gases could be mixed and consumed. The marvel was not that they had sometimes a considerable waste in fuel, but that with such poor arrangements for mixing the gases they had such good results.

The discussion on this paper was resumed on 25th October, 1898.

Mr John Thom.

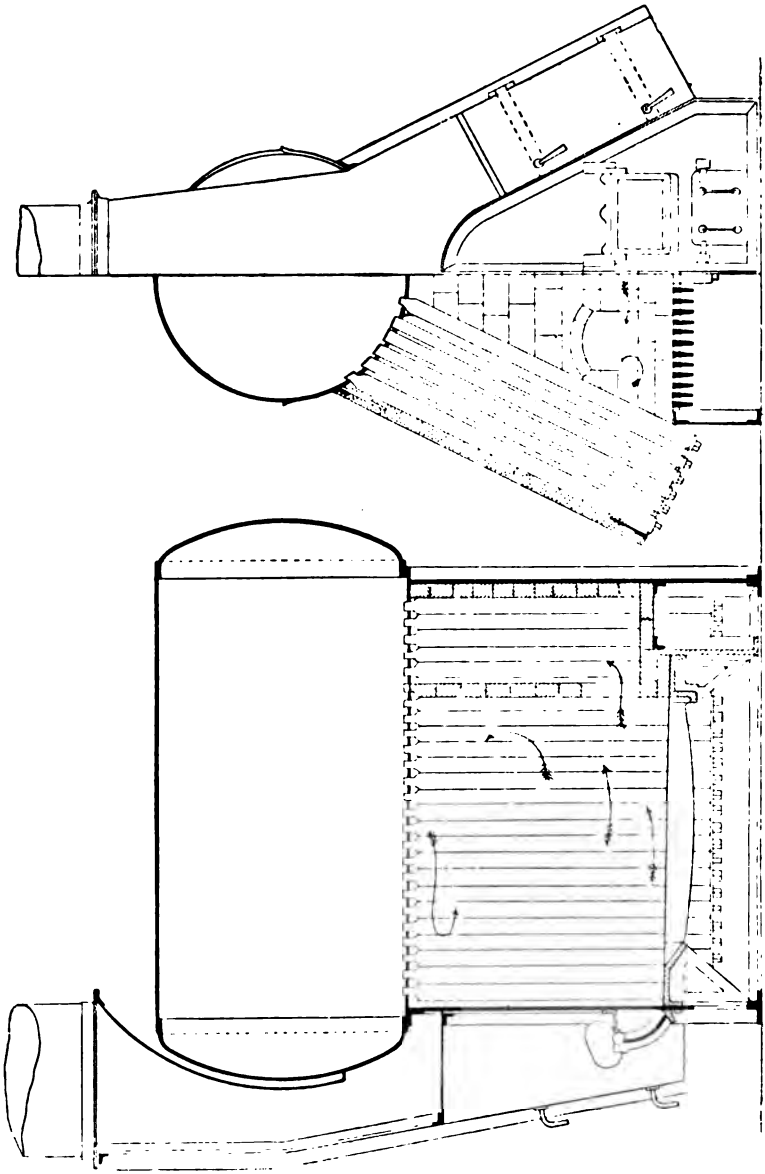

Fig. 6, Thom boiler.

Mr John Thom.

Mr JOHN THOM (Member) remarked that he could corroborate a great many of the assertions that Mr Weir had made, but with some of them he did not agree. Mr Weir said, "The purpose for this paper is practically an application of that experience to new and hitherto unfamiliar conditions." He (Mr Thom) had had water-tube boilers working under those very conditions for several years. In fact, the description, given on page 14, of what a good boiler should be, would apply to the water-tube boiler with secondary combustion chamber, shown in Figs. 6 and 7, even more appropriately than

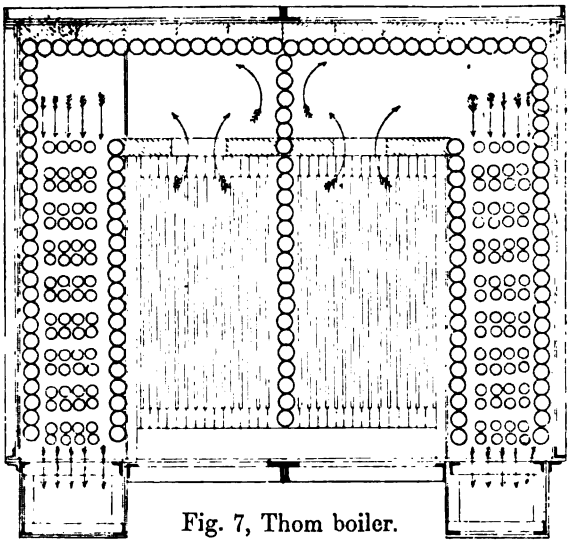

Fig. 7, Thom boiler.

Mr Weir's boiler, because the combustion chamber was arranged exactly as in a Scotch return-tube marine boiler. On page 17, Mr Weir said, "We are therefore led to ask, can we not, by adopting similar means in a water-tube boiler, bring about a similar efficiency to that obtained in those economical types of boilers?" He was glad that Mr Weir had brought that before them, and he believed that Mr Weir was quite right. On page 18, Mr Weir explained how the amount of air could be arranged and its effect in the combustion seen by the stoker. His (Mr Thom's) boilers were arranged in

Mr John Thom.

exactly the same manner, and they could be seen working under those conditions at Messrs Muir & Houston's. Professor Ripper was not one of those who believed that very large results and increased efficiency would be obtained by the prevention of smoke, and he entirely agreed with him. In the absence of good draught, if extra air had to be admitted to consume the smoke, the efficiency, if anything, was a little less under some conditions. The best arrangement was when the draught was just suitable to consume the coal without smoke. Professor Barr mentioned the advantage of having a fire-brick chamber, and considered that Mr Weir should have put that forward as one of the most important features. Mr Weir, with his experience, wanted to miss that out and not bring it forward, for the reason that fire-brick chambers were not looked on with favour, especially by marine engineers, as the bricks took so long to cool down that it would be difficult to enter the chamber until some time after the fires had been drawn. He had got better results out of a water-tube boiler with a combustion chamber, than with a marine type of boiler which it replaced, both in respect to economy and smoke.

Professor W. H. WATKINSON (Member) said that he had the privilege of seeing this boiler in action last spring, and was very much impressed by the perfection of combustion which appeared to be obtained. The smoke given off was exceedingly slight, indeed, it was very difficult to recognise any smoke at all. When looking into the combustion chamber, it was evident that the mixing of the gases was very complete, and that the combustion resulting was exceedingly good. He would like to ask Mr Weir whether any difficulty had been experienced due to the exposure of portions of the lower drums to the radiant heat from the fire. As those parts were exposed to a very high temperature, and as the circulation within them would be slight and undirected, he thought it probable that, if any dirt got into the boiler it would soon be deposited on the parts referred to. In other boilers it had been found necessary to introduce fire-bricks to protect the drums from the radiant heat of the fire. In the illustration given of Mr Weir's boiler, the tiles, E, E, seemed to cover

up some of what might be the very best heating surface, and he was inclined to think that that was a mistake. Another drawback which he anticipated from the arrangement shown, was that ashes would accumulate on the upper side of those tiles, and he believed that the spaces between the tubes directly above the tiles would soon be filled up with ashes. Perhaps Mr Weir would be able to tell them whether that was so or not, but judging from cases that he had had to deal with, where similar arrangements were made, that had been the difficulty. He would be inclined to put the tiles above the tubes instead of below them

Mr MATTHEW PAUL (Member) observed that the feature of Mr Weir's boiler was the addition of the combustion chamber, by which he expected to secure a very much improved performance. If it were of interest to the Institution he would like to give an instance, that occurred in his own experience, of the advantage of introducing a combustion chamber into an ordinary locomotive boiler, and though it was not a water-tube boiler, still the principle would be the same in the two types. With the grate in the usual place, if air were admitted into the top of the smoke-box, he was able to re-ignite the gases after they had come through the tubes, and fill the flue with flaming gases. That was manifestly an enormous waste, and if it were possible to use the gases inside the boiler, a considerable gain ought to accrue. He made an arrangement by which a brick furnace was added to the front of the boiler, shifted the grate into it, arranged the air admissions under the bridge, and used the old fire-box as the combustion chamber, with the result that complete combustion was secured in the fire-box; the gases could no longer be re-ignited in the smoke-box; and the evaporative efficiency was increased by about 15 per cent. That was the most striking instance that had come under his notice, of the advantage of providing a combustion chamber such as Mr Weir had in his water-tube boiler.

Mr SINCLAIR COUPER (Member) said in the last sentence of his paper Mr Weir's stated that he left it to the consideration of engineers generally, to say whether any points had been advanced in

Mr Sinclair Couper.

his paper which their experience and judgment did not fully and completely sanction and support. The paper had been before them since June, and they had had, therefore, ample time to examine it. He did not think there were any points which Mr Weir had brought forward that did not agree with the experience of most engineers. Mr Weir scarcely laid sufficient stress on the quantity of air which should be introduced into the furnace of a steam boiler. He believed that so very much depended on the quantity of air admitted, as well as on the place or places where it was admitted, that the whole question of combustion should be studied, not only for each boiler but for every kind of fuel that was burned in it. Although provision might be made for admitting the air at the back of the bridge—in his own practice he always provided a hole and regulating door for that purpose—yet very often in the course of working, these arrangements were rendered useless by being blocked up with ashes, and the air had to find its way up between the bars, with the result that the combustion was imperfect, so that no matter how well designed a boiler might be, it was spoiled in the working. In the sketches which Mr Weir showed of the marine boiler with the fire bridge at different places, he assumed that with the bridge placed as in Fig. 3, the consumption of coal might be 2 lbs. per I.H.P. per hour, while in Fig. 4, where the length of grate was further reduced, the consumption would be still less, and in Fig. 5, where the grate was shortened by pulling the bridge forward, Mr Weir then assumed that the consumption would be reduced to 1·4 lbs. of coal per I.H.P. per hour. He thought that Mr Weir scarcely gave sufficient credit to the shortening of the grate. From the tone of his remarks, in that connection, it might be inferred that he was suggesting that the whole of the improvement was due to altering the bridge, and thereby increasing the size of the combustion chamber, but manifestly most of it was due to the shortening of the grate, which permitted better stoking and more complete combustion. Most boilers were fitted with grates far too large in proportion to their heating surface. He had found in many cases, by reducing the length of grate and thereby burning less fuel, that the evaporative

duty of the boiler was maintained at its original figure. The grate area was another factor which should be determined for each boiler, in view of the particular fuel which was to be used. When he first saw the title of the paper, he thought that it was to be a consideration, in the abstract, of combustion in water-tube boilers, but he was pleased to see that Mr Weir introduced a boiler of his own, and although he did not suggest that Mr Weir should give them all the details, he considered that it would have added very much to the value of the paper, as a contribution to steam engineering, if he had given some of the actual working results. They knew how Mr Weir worked, that he worked exactly and accurately, and if a careful series of progressive trials had been made with the boiler and submitted, account being taken of every factor which went to make the trials complete, they would then have been in a position to compare the Weir boiler with authentic trials of other water-tube boilers. He hoped that Mr Weir would yet give such results to the public, as it would very much increase the value of his contribution.

Mr G. W. THODE (Member) thought that Mr Weir could scarcely have selected a more interesting subject than the one under discussion, but he could not agree exactly with all that Mr Weir had said. In the first place, Mr Weir assumed that all water-tube boilers had only one combustion chamber, and that in consequence they were naturally inefficient. In the second place, he informed them that his boiler having two combustion chambers was perfect in that respect, and by inference, *i.e.*, without giving any test results, he also informed them that it worked as economically as it was possible for any boiler to work, because of the arrangement of the combustion chambers, and the fact that by observations through spy holes the combustion in those chambers could be seen to be perfect. He (Mr Thode) did not think the fact of the combustion chamber being filled with flame was sufficient proof that the boiler was working as economically as it possibly could, nor did he consider it was proved that smokeless combustion of necessity meant an economical performance of the boiler; he

Mr G. W. Thode.

thought rather the contrary would be the general rule. He did not intend to speak about any special boiler, but would confine himself to the subject under consideration; viz., combustion; and as by way of example he was compelled to pick out some boiler, he would select for the purpose the Babcock & Wilcox land type. Incidentally, with reference to Mr Paul's remarks, he would mention that whilst the addition of a brick chamber in front of the locomotive boiler had effected an improvement in combustion and economical working, he believed that the boiler would have worked more economically still if it had been internally fired, and the combustion chamber made

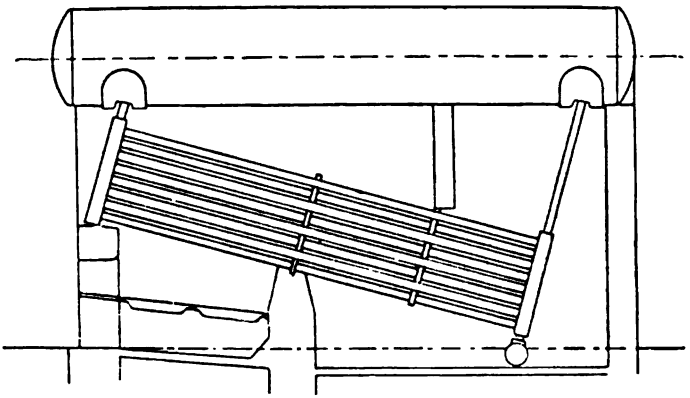

Fig. 8.

sufficiently large. The boiler illustrated by Fig. 8 had two combustion chambers, one immediately over the grate, and the second one in the triangular space between the tubes and the drum. The efficiency of that boiler would be anything from 70 to 80 per cent., and no furnace, however carefully designed, could possibly improve upon that efficiency. Further, if two of those boilers, absolutely identical and set alike, were sent out, it might be found that one would give the utmost satisfaction, especially with regard to smokelessness, whereas the other would give dissatisfaction. That might be brought about through difference in draught or in fuel, or both. When the fuel was slightly more bituminous, and this was known

beforehand, the boiler might be provided with a deeper combustion chamber as in Fig. 9. That would assist the combustion and reduce the smoke, but it would also reduce the efficiency, due to the radiated heat not being so readily absorbed. To make up for that loss, a series of tubes might be inserted, passing through the middle of the combustion chamber, as shown in Fig. 10. If tiles were placed on the top of the tubes, as indicated, it would be seen at once that two very effective combustion chambers were provided, in addition to the triangular chamber previously referred to. However, it would happen that this furnace, under certain conditions, would be smokeless and satisfactory, whereas, under other conditions, it might not

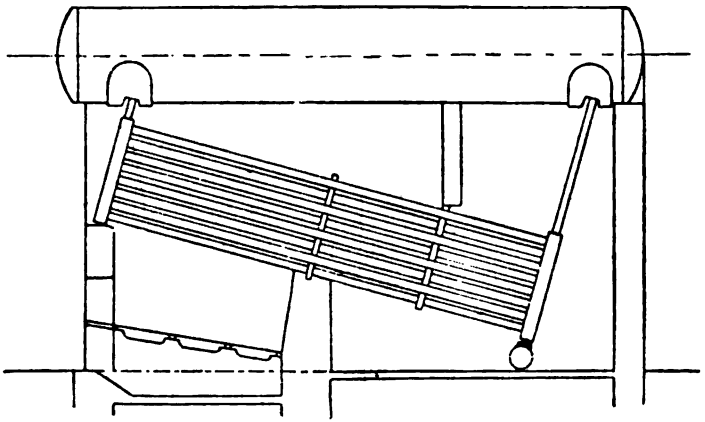

Fig. 9.

be; and, again, it might be advantageous to increase the size of the combustion chamber, which could be done, and had been done, as shown in Fig. 11. That arrangement showed two very large combustion chambers, and there was no doubt whatever that the results derived from such a furnace, with a certain kind of coal, would be more satisfactory than without it. One most important feature in Mr Weir's design, and upon which Mr Weir had scarcely laid sufficient stress, was the arrangement of the baffles over the fire, by means of which the gases were all thrown together in the centre, thereby greatly

Mr G. W. Thode.

assisting in their mixing and consequently in their combustion. The same object would be attained in the furnace, Fig. 11, if the bridge were re-arranged as shown in plan on Fig. 12. That had precisely the same effect, and, if the boilers were fired on alternate sides, the gases from the clear fire and from the green fire would be brought together and consumed to a very considerable extent. While all these arrangements under certain conditions of firing, fuel, draught, etc., would give satisfactory results, there was still a very large amount of coal in existence, particularly Scotch coal, which defied

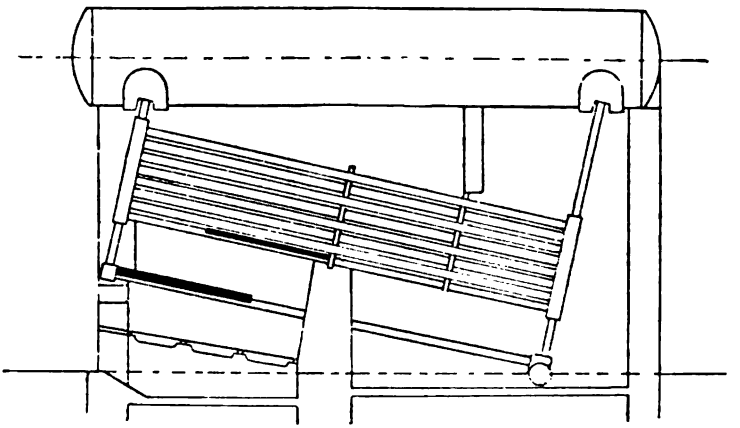

Fig. 10.

all attempts at smokeless firing on a hand-fired grate; and he believed that for such coal the only method of burning it smokelessly was to resort to mechanical firing. The reason why so many boilers smoked was that, frequently the exact conditions under which the boilers had to work were unknown beforehand, or, if they were known, they were changed after the boilers had been installed, and it was then not an easy matter to change the boilers, or to alter the coal, draught, and other conditions. As a result of these investigations, he would say that undoubtedly Mr Weir had produced a boiler and a style of furnace which in his own works gave every satisfaction, and worked smokelessly, but he thought he

was justified in saying that if this same boiler was sold to a customer, re-erected elsewhere, and worked under altered conditions, the same results would not be obtained. The inference was that boilers and boiler furnaces were of so complicated a nature that it was necessary, in order to obtain the best results, to deal with them

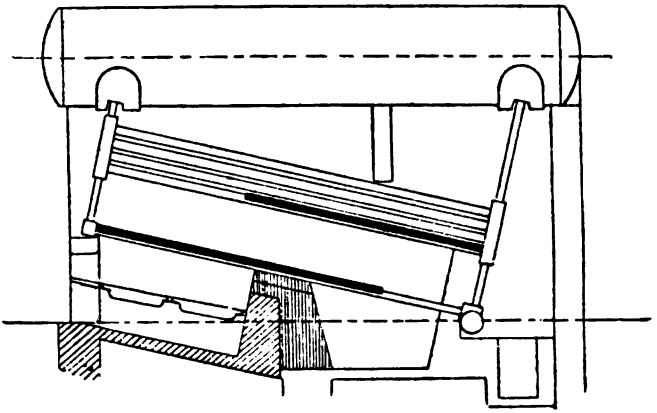

Fig. 11.

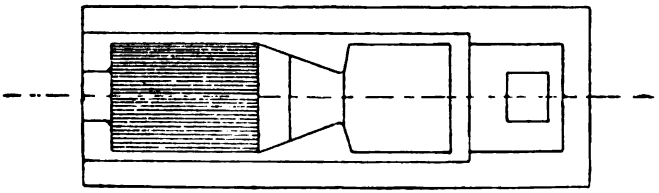

Fig. 12.

in each individual case according to the existing conditions.

Mr James Weir (Member), in reply, thanked the gentlemen who had spoken on the paper, and said he would not deal with their remarks individually, but would endeavour to group their points, and answer them generally. His contribution was intended not as a paper on the Weir boiler, but on combustion and the means of bringing it about, with special application to water-tube boilers. On that account, and possibly because his explanation of the method

Mr James Weir.
of forming the walls of the combustion chamber had not been very clearly shown, several of the speakers had gone slightly astray in speaking of the influence of the brickwork on combustion. In the combustion chamber of the Weir boiler, the bricks were formed to fill up the spaces between the tubes, so that the wall consisted of tube and brick alternately—not a solid wall of brick laid upon the tubes. The material of which the walls of furnaces, combustion chambers, or bridges were composed, had practically no influence on the results. He was aware that many defects in the construction of furnaces, bridges, and combustion chambers had been improved by the employment of bricks, but if any other material which would stand the heat had been used in a like manner, the results would have been practically the same. On the question of the influence which smoke prevention, by burning the gases, had on the efficiency of the boiler, he would say that preventing smoke, by obtaining complete combustion of the gases, could only have one result—all the heat available in the fuel was obtained by doing so. It did not follow, however, that they would be able to utilise all that heat in making steam. In many boilers the provision made to accomplish the combustion of the gases was so defective that it was more economical to let them pass off by the chimney as smoke; but it did not follow on this account that burning the gases was a source of waste; otherwise to waste a large proportion of their coal meant a saving in fuel. The correct deduction to be drawn was that the means employed to burn the smoke was bad. A question was raised regarding the deposit internally and externally. Internal deposit would take place if dirt or solid matter found its way into the boiler. The position in which it would be deposited depended on the course of the circulation in any particular boiler. His advice on that point would be, feed the boiler with good water and as little dirt as possible, and design it so that the circulation of the water would carry the dirt into some quiet place, as far removed from the heat as possible. Regarding any external deposit which took place on the surface exposed to the action of the gases from the fire, that was a proof of imperfect combustion.

Mr James Weir.

From former experience of water-tube boilers, he had anticipated some deposit on the tubes of his new boiler, and arranged them in such a manner as permitted of their being scraped. The boiler had now been running eleven months, and the tubes were still free from any scale, and they had not even been touched with a brush for ten months. He would mention also that the deposit which was found in the combustion chamber had the appearance of fine sand, yellowish in colour, and so clean that it could be rubbed on white paper without leaving any mark, which showed that there was no carbon whatever remaining. Concerning the results obtained during experimental tests with steam boilers, the skill of the fireman and quality of the coal were often of more importance than the design. In measuring and recording the results of boiler trials, the human factor was too often neglected, and good combustion could be obtained in almost any boiler furnace, provided men sufficiently skilful were employed to obtain it. It was not the balls that did the juggling, but the man who threw them up. It was this fact which generally made the comparison of results between one boiler and another of little value, and he considered that the steam boiler which gave the best results in everyday work was one that required least skill on the part of the stoker. In referring to a combustion chamber, some of the speakers seemed to consider that a simple space, irrespective of its position and arrangement in the boiler, constituted a combustion chamber, but that was far from the case. It was scarcely necessary to say that a combustion chamber could be made good or bad, right or wrong, like everything else. An example of a good combustion chamber had been given by Mr Paul, when he added a furnace to a locomotive boiler and utilised the original fire-box as a combustion chamber in which to mix the gases. The natural result of diminution of smoke followed, absence of heating in the uptake, and a very decided saving in fuel. An example of a bad combustion chamber had been given by Mr Thom, where a space behind the bridge opening was intended to act as a combustion chamber, whereas, it was simply a flue to carry the gases to the tubes. He

Mr James Weir.

was not in the least surprised that Mr Thom agreed with anyone that smoke burning was a source of waste, if his opinion was based on his experience of boilers having combustion chambers arranged like that described by him and shown on the drawing. Mr Thode's remarks were specially interesting and instructive to him, because, since he really understood anything about combustion chambers in steam boilers, the type of boiler represented by the Babcock & Wilcox design was that into which he found it most difficult to introduce an efficient combustion chamber. There was no difficulty in getting in this boiler wide roomy spaces above, below, and between the tubes, but to convert any of these spaces into an efficient combustion chamber was a very difficult problem to solve. Mr Thode's experience in trying to solve it had been extremely interesting to him, as it was practically what he had anticipated.

On the motion of the President, Mr Weir was awarded a vote of thanks for his paper.

THE TRANSMISSION OF HEAT THROUGH PLATES FROM HOT GASES TO WATER.

By Mr George Halliday, Wh.Sc. (Associate).

SEE PLATE III.

Read at Sheffield, June 15th, 1898.

Since the days of Joseph Fourier, the transmission of heat through plates has been greatly considered by men of science; yet the discussion at this Institution, this session, on the paper read by Mr F. J. Rowan,* fully demonstrates that the great body of engineers throughout the country have not yet made up their minds on the question. Joseph Fourier furnished us with a theory** for the transmission of heat through the mere plate; Lord Kelvin has informed us what likely takes place in the gases on the one side and the water on the other†; Rankine also has supplied us with formulæ.‡ From the discussion on Mr Rowan's paper, one gathers that there is no formula on which anyone depends. Professor Perry, in his Calculus for engineers, 1897, p. 65, assumes that the rate at which heat is transmitted through a plate is as the square of the difference of temperature, and gives a mathematical solution to the problem, and, when he has finished, he says he doubts if his assumption is true, and gives another solution on the assumption that the rate of transmission is simply as the difference of temperature. Perhaps the most helpful contributions on the question,

*Trans. Inst. of Engineers and Shipbuilders in Scotland, Vol. XLI.

**Fourier, "Theorie Analytique de la Chaleur," 1822.

†"Heat," by Lord Kelvin, "Encyclopædia Brittanica," ninth edition.

‡Rankin, "The Steam Engine," p. 258, thirteenth edition.

to practical engineers, have been the experiments made by Dr A. C. Kirk, Sir A. J Durston, and the late Mr Blechynden. The object of this paper, therefore, will be to lay before the Institution the leading known facts on the question.

The gases in the furnace.—Coal, when ignited on the grate of a boiler, combines with the oxygen of the air supplied to produce two oxides, carbonic oxide and carbonic acid. When these two compounds are formed, heat is liberated, which goes to make the quantity of heat and increase the temperature of the gases in the furnace-flues. The heat which is liberated is not the same in quantity for the two compounds. The heat liberated when one compound of carbon combines with oxygen to form the lower oxide is 4400 units, while 14,500 units are liberated when the resulting compound is carbonic acid. Should the carbonic oxide reach the chimney without being further oxidised, there is simply so much of the total available heat thrown away. There is, therefore, a distinct loss when carbonic oxide is found in the chimney.

The hydrocarbons, which are distilled off and escape because of insufficient air being supplied, are sometimes carried away to the smoke-box without being consumed. As these are made up of hydrogen and carbon, they become, when oxidised, water and carbonic oxide or carbonic acid. A pound of the hydrogen, when oxidised, liberates 62,032 units of heat. And here again we have great loss when any of the hydrocarbons are carried away to the chimney before they are consumed.

It comes, then, to this, that the coal contains free carbon and hydrocarbons, and the total heat in the coal is only obtained from it when it is completely consumed, that is when all the carbon and hydrogen in the coal is fully saturated with oxygen. The total heat is obtained from the coal when there is plenty of air supplied to the furnace, and when that furnace is kept at a sufficiently high temperature for the proper ignition of the carbon and hydrogen.

Dr Percy estimates the temperatures resulting from the combustion of carbon and hydrogen to oxides as follows :—

Charcoal to carbonic acid	18,306·0°	Fah.
„ „ oxide	12,726·0°	„
Hydrogen to water	12,260·7°	„

These are the temperatures when pure oxygen is used for the combustion. The late Mr D. K. Clark* estimated the carbon when air is used as follows :—

1. When just enough air is present	5,027°	Fah.
2. When the air is diluted with air equal in quantity to air of combustion	3,527°	„
3. If diluted with air equal in quantity to air of combustion	2,688	„

These are simply calculations made without consideration of the lowering of the temperature due to radiation and conduction. Dr Percy concludes in his "Metallurgy" what he has to say on resulting temperature with the following important statement:— "The longer the time required for the combustion of any fuel, the greater the loss of heat by radiation and conduction, and, consequently, the less the calorific intensity." Even when the combustion is rapid and everything is done to raise the temperature, another principle of action comes in to neutralise it. For, at higher temperatures, carbonic acid will be dissociated into carbon and oxygen, and steam into hydrogen and oxygen. Hydrogen will not combine at a temperature higher than 3,460° Fah., nor carbon at higher than 4,890° Fah. These are the limiting temperatures, but long before that, dissociation has been going on, and there is not the full quantity of heat present at any time which theory would lead one to expect. In fact, dissociation is going on all the time at a point lower than that of the critical temperature. The quantity of air of dilution supplied to the furnace also affects the temperature; the more air supplied, the greater the quantity of heat wasted in raising it to the temperature of the furnace, and the lower will that temperature be. It is more accurate to take the records of the

* "The Steam Engine," D. K. Clark, p. 54.

temperature as given by the pyrometer. Mr Isherwood found that the temperature of the surface of the fire was 2,000° Fah., Mr W. A. Martin that the temperature of the furnace of the boilers of the *Boadicea* was 2,000° Fah., and Mr John Elder obtained the following results :—

Over the centre of the fire	3,405° Fah.
Over the bridge	1,735° „

Mr Elder attributed the high temperature of the fire surface to radiation, and the low temperature over the bridge to the absence of radiant heat. Mr Clark says that, with externally-built brickwork furnaces, the temperature may rise to 3,000° Fah., but inside furnaces seldom have a temperature rising above 2,000°. The temperature of the furnace is not by any means a fixed point. It does not depend on the heat of combustion, but on a great many other things—on new charges of coal and the opening of the door to admit them. Figure 1 gives a graphic representation of the variation of temperature, both in the furnace and in the chimney, for a period of seven hours. It comes, then, to this, that when calculations are made for the transmission of heat through plates, for a constant temperature of furnace and chimney, it must be understood that no such thing exists in practice, as the temperature may change in the furnace 200° Fah. in less than a quarter of an hour, and the chimney temperature may vary within 100° in about the same time. A statement of temperatures, means temperatures at a particular instant.

It appears that complete combustion cannot be gained by supplying the furnace with air sufficient for providing the requisite quantity of oxygen. There must be excess of air. Not too much, however, for then a large quantity of the heat goes to heat up the extra air and is thrown away in the chimney. On this point much can be learned from the tabulated results of trials of boilers made by Mr Bryan Donkin and Professor Kennedy.* An analysis of the chimney gases was in each case taken, and the percentage of carbonic acid, carbonic oxide, oxygen, and nitrogen ascertained. If

* "Trials of Boilers," by Mr Bryan Donkin and Prof. Kennedy.

only sufficient oxygen is supplied to burn the carbon, 11 lbs. of air will be necessary. The following table gives the weight of dry air used, and the percentage by weight of carbonic oxide found by analysis:—

No of Expt.	Pounds of Dry Air.	Percentage Weight of CO_2 present.
1	16·7	1·02
2	16·8	·34
3	16·9	2·59
4	17·5	·24
5	19·4	·21
6	21·2	·28
7	22·0	·00
8	25·2	·00
9	28·0	·00
10	28·6	·00
11	29·6	·10
12	30·3	·28
13	30·0	·00
14	38·6	·00
15	42·2	·00

When as much as 22·0 lbs. of dry air per lb. of coal has been allowed, there is not, with two exceptions, any carbonic oxide found in the chimney gases. Those two exceptious are Nos. 11 and 12, and are the results of trials of a De Naeyer boiler, where the tubes are close down on the fire, and there is no combustion chamber. One might naturally attribute the result to want of proper mixing of the gases above the fire, and chilling too soon after leaving the grate. No. 3 is a bad result; the boiler was of the vertical type, and the result was not expected to be good. The variation in the quantity of carbonic oxide found present is probably due to difference of draught. It is clear, though, that with ordinary conditions, twenty-two pounds of dry air supplied gives complete combustion. Anything above that quantity requires heat to raise it in

temperature, and is so much heat wasted. With good stoking, each boiler will require, under ordinary conditions, so much air per lb. of coal burnt. This quantity should be proved by trial, and the draught of the boiler regulated accordingly. Suppose the temperature of the air in the boiler-house is 50° Fah., the temperature of the chimney gases and the amount of air used is 550°, the increase of temperature of the surplus air will be 500°. Now, 4·2 lbs. of air raised 468° Fah. require the same quantity of heat as 1 lb. of water raised 936°, that is the same as $\frac{1}{2}$ lb. of water from and at 212°. It comes, then, to this, that for every 4·2 lbs. of surplus air raised 468°, $\frac{1}{2}$ lb. of evaporation is lost. Now, 11 lbs. of air too much is supplied to obtain complete combustion, and $\frac{11}{4 \cdot 2} = 2.6$ half-pounds, or 1·3 lbs., of evaporation thrown away when half of the air supplied is surplus air discharged into the chimney at a temperature of 468° above the temperature of the boiler-room. The increased temperatures of the furnace gases above that of the outside air in six cases were as follows :—

No. 2	...	685·0° Fah.	No. 5	...	566·0° Fah.
„ 3	...	334·5° „	„ 6	...	406·6° „
„ 4	...	561·0° „	„ 7	...	521·5° „

So that under ordinary draught, and without a feed-water heater, the heat rejected in the chimney, due to excess of air, is seldom much under 1·3 lbs. of evaporation per lb. of fuel. If there is not excess of air present, then there is loss due to incomplete combustion. In No. 1 experiment, only 16·7 lbs. of dry air was supplied to each pound of dry coal, with the result that 1·02 per cent. of the gases in the chimney was carbonic oxide. By computation this 1·02 per cent. shows that $\frac{1}{11}$th of the carbon went to form carbonic oxide. For each pound of carbon used, $\frac{1}{11}$th formed carbonic oxide. Now, when one pound of carbon forms carbonic oxide, there is a loss of heat due to incomplete combustion of 10,100 units, and $\frac{1}{11}$th lbs. forming carbonic oxide will be followed by a loss of $\frac{10,100}{11} = 918$ units,

or, roughly, $\frac{1}{11}$th of the carbon going to form carbonic oxide is equivalent to a loss of 1 lb. of evaporation from and at 212° Fah.

We see, then, that with a supply of 22 lbs. of air we have a loss of 1·3 lbs. of evaporation due simply to excess of air. No 1 shows a loss of 1 lb. of evaporation due to insufficient air—5·3 lbs. less than double the necessary quantity. This appears to be rather high. No. 2 shows that with 5·2 lbs. of air below the point of saturation, only ·34 per cent. of the chimney gases was carbonic oxide. No. 4, with 17·5 lbs. of air, gave ·24 per cent. of carbonic oxide; No. 5, with 19·4 lbs. of air, ·21 per cent.; and No. 6, with 21·2 lbs. of air, ·28 per cent. These trials were not experiments to obtain the best point of supply of air, and no rule must be drawn from them.

Messrs Délabéche, Playfair, and Longridge, obtained results by taking the colour of the smoke as a criterion for complete combustion. These, and a result obtained by Mr D. K. Clark, are given below:—

	Coal consumed per sq. ft. of grate per hour.	Surplus air.
Cornish boilers	2 lbs. to 4 lbs.	100° %
Délabéche and Playfair ...	10 lbs. to 16 lbs.	25 to 50° %
Longridge	20 lbs., and upwards,	$9\frac{3}{4}$° %

It appears, then, as if the draught and the arrangements of the furnace and combustion chamber had a good deal to do with the excess of air necessary for complete combustion.

The ideal arrangement is to expel the gases out of the chimney by mechanical means, at the same temperature as the outside air. In that case, excess of air would not be a great trouble. But, if even that were attained, excess of air brings in another trouble of great importance to the naval engineer. It means low initial temperature of the furnace, and with high efficiency of heating surface, this means great heating area and a heavy boiler.

Naval architects want the lightest possible boiler. They would rather err a little on the carbonic oxide side than on the excess of air side. They must have a fierce fire, mechanical draught, the

lightest possible heating surface, and the minimum of loss by carbonic oxide and excess of air.

Imagine, then, that a fierce fire, a fire of high temperature, has been gained; let us consider the way in which the heat is conveyed from the fire to the water. There is the water to consider, then the hot gases, then the plate. Consider the plate first. To do so, we may not advance very far in the improvement of steam boilers; but one is always the better of knowing exactly what has been done by others on any question of science.

Somewhere about the year 1824, Joseph Fourier gave a carefully drawn up theory of the transmission of heat through a plate. This theory has been given to us in the beautiful language of Prof. James Clerk Maxwell, in his text-boak on Heat. Conceive, he says, a large boiler with a flat bottom, the thickness of which is c. Flames are beneath, and they maintain the lower surface of the plate at the temperature T, and heat flows up through the plate to the water, which keeps it on the water side at the temperature S. Consider now a portion of this plate of length a, of breadth b, and thickness c. He says, further, that the flow of heat through the plate depends on "the dimensions of the plate at this place, the temperature of its upper and lower surface, and the flow of heat through it, as determined by these conditions." So long as the difference of temperature does not affect the nature of the material at these temperatures, the flow of heat is exactly proportional to the difference of temperature, other things being the same.

Suppose, then, that a, b, and c are taken, each equal to the unit of length, and T one degree above S, then the flow of heat is such that the same quantity which enters the lower surface leaves the upper surface and enters the water. Let this quantity be k in the unit of time. Further, let H be the quantity of heat which flows through a boiler plate of dimensions ab, and thickness c, when the lower surface is at temperature T and the upper surface at temperature S. Divide, he says, the lower plate into c horizontal layers, the thickness of each being unity, and each layer into ab cubes, the sides of each cube being unity.

The difference of temperature of the lower and upper sides of the plate is T − S. As there are c layers, the difference of temperature of the lower and upper sides of each layer will be $\frac{T - S}{c}$ and, therefore, the difference of temperature of the lower and upper sides of each cube is $\frac{T - S}{c}$. The flow of heat through each cube in unit of time will be $\frac{k}{c}\left(T - S\right)$ Since each layer contains ab cubes, the flow through the plate in time t is

$$H = \frac{a\,b\,t\,k}{c}\left(T - S\right).$$

The heat transmitted is therefore directly proportional to the area of the plate, to the time, to the difference of temperature, and to the conductivity; and inversely proportional to the thickness of the plate. The term k, the conductivity of the material, will be obtained from the equation

$$k = \frac{c\,H}{a\,b\,t\,(T - S)}.$$

Using Clerk Maxwell's letters—

L = Unit of length.
T = Unit of time.
H = Unit of heat.
θ = Unit of temperature.

$$k = \frac{L\,H}{L^2\,T\,\theta} = \frac{H}{L\,T\,\theta}.$$

Fourier says next, suppose we know the temperature of every point of a solid body through which heat is being transmitted. Suppose, further, that a surface be described which shall contain all the points with a given temperature T_1. This imaginary surface will separate all the points of the body with a temperature higher than T_1 from all the others with a temperature lower than T_1.

Now, suppose that a similar surface be described containing all

the points with a temperature of exactly one degree less than T_1, and another containing all the points with a temperature exactly one degree more than T_1, and not to stop even at that, but suppose that a series of surfaces are described, each containing all the points for every exact degree of temperature between the hot side of the plate and the cold. These surfaces are of equal temperature throughout, and are the isothermal surfaces of the plate. The plate itself will then be divided into a number of layers by the surfaces, and the space between two surfaces which differ in temperature by one degree, will be in the form of a thin plate not necessarily of the same thickness throughout. The plate, which is under description, is supposed to be part of a complete shell, and subject to the same heat influences. At every point of the surface of a layer there is a flow of heat from the hotter surface to the colder; the direction of the flow at any time is at right angles to the surface at any point; and the rate of transmission is greater the thinner the layer and the greater the conductivity of the material at that point.

Suppose, now, a line of unit length is drawn at right angles to the surface of the layer, then if c is the thickness of the layer, and the others cut by the line are nearly of equal thickness, it will cut $\frac{1}{c}$ layers. As the difference of temperature between the surfaces of each layer is one degree, $\frac{1}{c}$ will be the difference of temperature for unit distance measured in the direction of the flow. Since k is the conductivity, the transmission of heat along this line, in unit time, will be $\frac{k}{c}$.

This then gives a mental picture of the thermal state of the body. It is divided into a number of imaginary layers, the external surfaces of each being isothermal surfaces and differing in temperature by one degree; while a steady flow of heat is going on in the direction at right angles to the isothermal surfaces, from that of higher temperature to that of lower.

Then, again, there is another condition which is necessary to

satisfy the state of a steady flow of heat, and that is, that the heat which goes in at one isothermal surface must come out at the next lower in temperature. If more heat goes in than comes out, that particular layer will rise in temperature, if less heat goes in, it will fall in temperature and there will be a change in condition of the body. This state of steady flow requires for its fulfilment a steady external source of supply of heat on the hot side of the plate, and a cooling medium on the cold side to take away the heat as steadily. This is Fourier's theory of the transmission of heat through the plate.

Suppose, now, the difference of temperature between two sides of a plate be double what it was before, then the thickness of each layer will be one-half, $\frac{1}{c}$ will be double what it was before, $\frac{k}{c}$ will be double, and the transmission of heat double. If the difference of temperature between the two sides of the plate be trebled, the heat transmitted will be trebled, assuming always that the state of steady flow of heat is maintained. Suppose, now, the conductivity of the plate is doubled, the transmission of heat will be doubled, if trebled the transmission will be trebled. If the plate is of copper, instead of iron, then the transmission will be six times what it was before, because the conductivity of copper is six times that of iron; assuming of course that the difference of temperature of the two surfaces of the plate, its thickness, and everything else remains the same. The plate, its thermal state, and what goes on in it, has only been considered from theoretical assumptions; we have now to see what are the conditions and limitations, as shown by experiment. Dr Kirk's experiments come first.

Dr Kirk had often seen plates burned by high temperatures. He set himself the task of determining how far he could go in the direction of thick plates for providing high pressure steam for triple-expansion engines. Abandoning the water-tube boiler, he made experiments to find the limits as regards high pressure of the ordinary Scotch boiler. From the engineering laboratory point of view the question he had to solve was: Does the plate rise much

in temperature on its flame side, and what is the limit of thickness of plate to which one can go in order that it may not become too highly heated and oxidise? The apparatus Dr Kirk used for his experiments consisted of a wrought iron dish, as shown in Fig. 2, with part of a steel tube, got for a boiler of H.M.S. *Gibraltar*, expanded into the plate in the usual way. The tube plate of the Scotch boiler is subjected to the fiercest fire, and so the bottom of the dish with the tube fixed in it, was intended to imitate the condition of the tube plate as nearly as possible. Half into the tube plate and half into the tube three plugs of fusible metal were inserted; one of tin, one of lead, and one of antimony. The plugs when they melted indicated the temperatures of the bottom of the plate; the tin melted at 446° Fah., the lead at 617°, and the antimony at 807°. At the beginning, and during the first experiment, the bottom of the dish, *a a*, was $2\frac{3}{4}$ inches thick. The dish was placed on an ordinary smelting hearth, the smithy blast being supplied through a couple of tuyeres. In this way, and using fusible plugs of different melting points, he obtained the following results:—

RESULTS OF DR KIRK'S EXPERIMENTS.

Thickness of Plate.	Temperature of Plate outside.	Temperature of Tube.	Difference of temp. per sixteenth-inch.
$2\frac{3}{4}''$ ...	1000° Fah.	Lower than 809° Fah.	18° Fah.
$1\frac{3}{4}''$ ...	about 700° ,,	— ,,	17° ,,
$1\frac{1}{4}''$ ...	— ,,	600° ,,	17° ,,
$1''$ ...	500° ,,	— ,,	18° ,,
$\frac{15}{16}''$ ...	— ,,	450° ,,	16° ,,
$\frac{3}{4}''$ ...	— ,,	446° ,,	19° ,,

It will be seen from the above, that with these roughly estimated differences of temperatures, there is a fairly constant difference per sixteenth of an inch of thickness.

Sir A. J. Durston employed similar means to obtain the temperature of plates—fusible plugs for estimating the temperature. The most notable results of his experiments are as follows:—

1. With $\frac{1}{4}$-inch plate, water above 212° Fah., flame below 1500°, temperature of fire side 240°; difference for $\frac{1}{16}$-inch, 7° Fah.
2. Same with layer of grease of $\frac{1}{32}$-inch thick, temperature of fire side 330° Fah. Probable difference of temperature for layer of grease $\frac{1}{32}$-inch thick, 90° Fah.

He also obtained, with an open dish and with the liquid at boiling point, the following results:—*

	Temp. of hot side of Plate.	Temperature of Fire.
Clean fresh water	280° Fah. ...	2,200° Fah.
Mineral oil up to 5 %	310° „ ...	2,300° „
Fresh water 2½ % paraffin ...	330° „ ...	2,100° „
Fresh water 2½ % methylated spirit	300° „ ...	2,500° „
A greasy deposit $\frac{1}{16}$-inch thick,	550° „ ...	2,500° „

With water at a pressure such that the temperature of steam was 363° Fah.—

	Temp. of hot side of Plate.	Temperature of water.	Difference of Temp.
Over Bunsen burner ...	430° Fah. ...	363·0° Fah. ...	67·0° Fah.
Over blast forge ...	430° „ ...	344·5° „ ...	85·5° „

We have now gone through the experiments of the late Dr Kirk to determine how the thick plates of a boiler may be made with safety. We have also discussed the experiments of Sir A. J. Durston made to determine the temperature of the fire side of a plate under varying circumstances. We now come to the experiments made by the late Mr Blechynden, to determine the effects of varying differences of temperature, and secondly varying thickness of plate.

A full description of the apparatus used and the conditions of the experiments will be found in "The Transactions of the Institution of Naval Architects, Vol. 35." Some of the results of the experiments are shown in the table on the next page.

* These all appear to prove the correctness of Lord Kelvin's view of a thin layer of liquid at the surface.

Each of the four groups consists of two readings of experiments made with the same plate. The 5th column gives the second reading of temperature in column 3, divided by the first of each pair; the 6th gives the evaporation from the plate of the second reading divided by the first; and the 7th column gives the square of the second temperature divided by the square of the first. It will be seen that the numbers in columns 6 and 7 are nearly equal, and that the evaporation with the same plate is proportional to the

	Temp. of furnace.	Diff. of temp.	Total units of evap.	Temp. 2. / Temp. 1.	Evap 2. / Evap 1.	Temp. 2. / Temp. 1.
1	2	3	4	5	6	7
1	838°	626°	6,820	1·9	3·97	3·87
2	1,445	1,233	27,100			
1	775°	563°	6,705	2·0	4·4	4·0
2	1,360	1,148	29,550			
1	625°	413°	4,270	3·0	9·13	9·0
2	1,465	1,253	38,950			
1	850°	638°	9,175			
2	1,465	1,253	38,950	1·9	3·84	3·86

difference of temperature between the flame and the water, squared. The accompanying curves, Fig. 3, give the evaporation and the difference of temperature for different thicknesses of plate. For a $\frac{1}{16}$-inch plate it is 62,000 thermal units per square foot per hour; for a $\frac{1}{8}$-inch plate 60,000; for a $1\frac{3}{16}$-inch plate it is 38,000, with a difference of temperature of 1,600° Fah. It appears also that the higher the carbon value the thinner the plate, and the greater the difference of temperature between flame and water the higher is the efficiency of the heating surface. These factors point to clean, thin, and high carbon value of plates to be used in boilers.

We can now consider what really goes on between the hot gases as the source of heat on one side of the plate, and the water on the

other. To simplify matters, assume first that the hot gases are as still as the plate and remain fixed in position. Assume also that the water remains stationary, and simply conducts heat away from the plate as if it were a solid. We have then three separate bodies, water, metal, and gas, side by side, and the heat flowing through the three. Now, it has been said by eminent men in London, that if ever one has any doubt about anything in Physical questions he had better see what Lord Kelvin has said about the matter. This is what Lord Kelvin has said about this matter:—"Although the water or air at the very interface of its contact with the metal is essentially at the same temperature as the metal, there must be great differences of temperature in very thin layers of the fluid close to the interface when there is large flux of heat through the metal, and the temperature of the fluid as measured by any practicable thermometer or inferred from knowledge of the average temperature of the whole fluid, or from the temperatures of entering and leaving currents of fluid, may differ by scores of degrees from the actual temperature of the solid at the interface."

Now, suppose that the plate is of iron, and that the thickness of a layer of iron, the temperatures of the surfaces of which differ in temperature by one degree, is c; since the conductivity of iron is 80 times that of water and 3,500 times that of air, the layers of water, whose surfaces differ by one degree, will be $\frac{c}{80}$ and the layers of hot gas $\frac{c}{3,500}$. Suppose c is $\frac{1}{10}$-inch, then for the same difference of temperature the thickness of a layer of air will be $\frac{1}{35,000}$th of an inch. If the average temperature of the furnace gas is 1,600° Fah. and the temperature of the fire side of the plate 400°, the total thickness of the layers of air will be $\frac{1,200}{35,000} = \frac{1}{30}$-inch, very nearly.

The layers of metal, in case of boiler plates with adjacent interfaces having a difference of temperature of one degree, are often much less than $\frac{1}{10}$-inch in thickness. One calculation made the difference of temperature of the two sides of a $\frac{1}{16}$-inch plate, $2\frac{1}{2}$° Fah. This gives

a thickness of $\frac{1}{40}$-inch for a difference of temperature of one degree of its interfaces, and it follows that the total thickness of the layer of hot gas would be $\frac{1}{120}$-inch, which is about the thickness of a sheet of note paper. One can easily imagine a layer of gas of this thickness adhering permanently to the sides of a plate, without being much disturbed with the motions of the hot gas on its fire side.

Consider next the water side. Taking c again as the thickness of a layer of iron, the sides of which have a difference of temperature of one degree, then the thickness of such a layer of water will be $\frac{c}{80}$, and as c was taken above as $\frac{1}{40}$-inch, we have the thickness of a water layer $\frac{1}{3200}$-inch. Suppose the temperature of the plate on the water side is 400° Fah., and the temperature of the water in round numbers is 350°—which is about the temperature for water with a steam pressure of 150 lbs. This gives a difference of temperature of 50° Fah. between the side of the plate and the body of the water. Fifty layers each $\frac{1}{3200}$-inch thick is $\frac{1}{60}$-inch, which is about the thickness of two sheets of note paper taken together. Now, water adheres to the surface of a plate, and it is quite within the mark to imagine that a film of water, of thickness equal to that of two sheets of note paper taken together, adheres to the water side of the plate.

What then does this complete theory of Lord Kelvin give us? It gives us three conducting bodies—water, iron, and gas, and if the iron be taken as $\frac{1}{16}$-inch thick, the thicknesses of the three are in the proportion shown in Fig. 4.

But it will not be quite so simple as shown. Although there is an adhering film of gas, it is not quite evident that the same particles of gas will form that film. It is hardly to be expected that this will be so, when there is constantly rolling against the film of gas, gas of the same kind greatly agitated. The fire side of the film will hardly be defined, there may be breaches into it, and there will be diffusion, and, if the theory of heat is correct, there will be a constant interchange of particles. That being so, and the velocity of the particles being as the square of the temperature, there will be an average effect which should be greater than that expected from a simple rise

of temperature. Consider the plate to have a difference of temperature of 5° Fah. between the two sides; this will cause twice the quantity of heat to go through, and a difference of temperature of 10° will cause four times the heat to be conducted through. With this rate of transmission, the layers on the water side will become a quarter thinner, and the temperature of the surface of the plate on the water side four times higher. The plate will now be at a temperature of 550° Fah. on the one side, and 560° on the other; the water still at 350°; and hot gases at 2850°. My contention is that half of the increase of temperature on the fire side is due to ordinary conduction of heat through a gas, while the other half is due to the diffusion and interchange of the molecules which compose the skin layer and those which compose the body of the hot gas.

It has been assumed that the layer of gas on the side of the metal is constant in thickness, but of course it will not be necessarily so, and the rolling of the hot gases must be continually playing a part. But on the whole there may be some average result which may be attained in practice on the lines laid down.

We have now discussed what goes on at any particular place of the boiler or tube plate when there is a given temperature. But the temperature is high in the furnace, and falls as it goes towards the chimney. The temperature is also constantly changing up and down in the furnace through hundreds of degrees, and therefore will be constantly undergoing change on the way to the chimney, and also at the chimney. We are now only interested in the manner in which the transmission is distributed over the heating surface. Sir A. J. Durston has found temperatures along a tube which are shown by the curve, Fig. 5. Here it is seen that the temperature is 1344° Fah. in the fire-box, and a little over 600° in the smoke-box. It falls rapidly at the beginning, because the transmission is very great then. In the same figure a second curve shows the comparative rate of transmission at each point of the tube.

Distribution of Evaporation.—A locomotive boiler was taken, made up of sections for experimental purposes as shown in Fig. 6, and the evaporation from the sections separately recorded for different draughts.

Relative Evaporation performance of a locomotive boiler on the Northern Railway of France :—

Fuel.	Force of Draught.	Fuel consumed per sq. ft. of grate.	Relative total quantities of Water evaporated.					
			1st Section.	2nd Section.	3rd Section.	4th Section.	5th Section.	Total.
	Millimetres.	lbs.	per cent.	per cent.	per cent.	per cent.	per cent.	per cent.
Coke	20	48·5	46·2	30·1	13·0	6·9	3·8	100
	40	72·7	42·9	29·9	14·2	8·1	4·9	100
	60	80·8	38·3	30·8	16·0	9·1	5·8	100
	80	88·2	36·5	31·3	16·3	9·4	6·5	100
	100	85·7	31·1	32·5	18·5	10·5	7·4	100

The table shows the average results of the performance of coke. In Fig. 7, the base of the diagram is set off to represent the areas of the sections. The vertical heights of the rectangles represent the evaporation. The curve shows the rate of evaporation at every point of the heating surface. The ratio of each sectional evaporation over that which follows is very nearly one-half:—

$$\frac{2\text{nd}}{1\text{st}} = \cdot 5 \qquad \frac{3\text{rd}}{4\text{th}} = \cdot 56 \qquad \frac{4\text{th}}{3\text{rd}} = \cdot 65.$$

One may see from the diagram that an extension of the heating surface would not be followed by a great access of heat to the water.

Mr D. K. Clark proved, as a result of many experiments, that the evaporation of a boiler per lb. of coal decreased in proportion as the grate area increased. He also established the rule that with the same area of grate the evaporation increased as the square of the heating surface. The curve of evaporation which he made, representing the evaporation from the tube plate and each point of the length of the tube, has a family resemblance to the indicator diagram, Fig. 7. The transmission of heat takes place between two temperatures, that of the furnace and that of the smoke-box. It is like

the case of the steam cylinder; the work is done between the temperature of admission and of exhaust. When a feed-water heater is used, the curve of transmission of heat may be extended and the area of the curve increased, as it is increased in the case of the indicator diagram when a condenser is added to the engine. The feed-water heater, however, does not simply increase the diagram of evaporation but affects it, and introduces advantages by making a compound generator in the same way as the compound cylinder has advantages over the single cylinder.

From the foregoing views with regard to thin plates, and the higher rates of transmission of heat obtained by them, it will be felt that water-tube boilers take advantage of this property. A tube $\frac{1}{8}$-inch thick will transmit 60,000 thermal units per square foot per hour, while a $\frac{3}{4}$-inch plate transmits only 46,000. Then, again, the movement of the water over the flat surface of the thick plate is comparatively sluggish compared with the movement of water over the inner surfaces of tubes, and whether it is owing to the disturbances of the layer of skin water, there is due to this a great increase of the transmission. Further, water which is continually circulating and being brought up the upcomers, is repeatedly being brought through the boiling point; and due to this the transmission is sometimes increased three-fold. Since the water-tube boiler lends itself to these advantages, it becomes less difficult to understand that the weight per H.P. in the best boilers of this type is so low.

But there is still another factor which must be taken into account when dealing with the transmission of heat from a hot gas moving through tubes. A natural draught allows the gases to go through amongst the tubes or through them at a comparatively slow rate, while with forced draught the rate is very fast. The question then arises whether or not the rate of motion of the gases over the surface has any influence on the rate of transmission. Neither Newton, Dulong, Peclet, Joule, or Rankine have taken this into consideration. But Osborne Reynolds was sure that the rate of motion would exert considerable influence, and he wrote the following.—"The cooling effect of a wind in comparison to still air is so

evident that it must cast doubt on the truth of any hypothesis which does not take it into account."

Professor Ser has made direct experiments to settle the question, as he did in the case of the rapid motion of the water through a tube. For the purpose of his experiment he used a tube ·25 metres in diameter, with 50 radial projections like the nerves in a Serve tube. The height of these nerves was ·05 metres, and they diminished in thickness from ·008 metres at the bottom to ·002 metres at the top. The heating surface was 5·40 square metres. The operations were made in two tubes, one surrounded by a cylinder removed one centimetre from the extremities of the projection, allowing for the passage of air an annular space of ·0488 square metres only; the other placed in a rectangular box leaving free an annular space of ·098 square metres round the tube, a passage more than double the other.

The results of Professor Ser's experiments were as follows:—

Section of passage of the air ·098 sq. m.		Section of passage of the air ·0488 sq. m.	
Speed through the tube in metres per second.	Co-efficients in calories per sq. metre per hour.	Speed through the tube in metres per second.	Co-efficients in calories per sq. metre per hour.
·42	4·80	1·137	6·8
·48	4·12	1·318	7·66
·57	4·82	1·350	7·74
·58	4·82	1·369	7·88
·65	4·88	1·648	8·56
·68	4·98	1·684	8·66
·75	5·06	1·884	9·42
·80	5·94	1·930	9·00
1·047	7·52	2·360	10·44

From the above it is clearly seen that the velocity of the gases over the surface exert a considerable influence. With a velocity of ·42 metres per second, the transmission of heat per square metre per hour is 4·8, with a speed of 1·047 metres per second, the transmission is 7·52 per square metre per hour.

Correspondence.

Mr F. J. ROWAN (Member)—Mr Halliday had given a fairly complete view of the limitations to the realization of the theoretical temperature of combustion usually experienced with ordinary boiler furnaces. Those which were due to insufficiency or excess in the air supply, plainly pointed to the need for improvement in the means of combustion usually employed. For when Mr Halliday said that: "It must be remembered that no such thing as a constant temperature of furnace and chimney exists in practice, the temperature changing in the furnace 200° Fah. in less than a quarter-of-an-hour, and the chimney varying within 100° in about the same time," he could not mean that such a thing was not possible provided that better arrangements were employed other than those in common use. For instance, a large amount of that fluctuation of temperature would be prevented if the necessity for repeatedly opening furnace doors were abolished, and there was no reason why that should not be done. In considering the possible effects of dissociation on the temperature produced where no excess of air was supplied, Mr Halliday overlooked the fact that, dilution with the nitrogen which the air contained, acted in lowering the possible temperature of combustion as compared with the possible with pure oxygen. Bunsen's investigations showed that the effect of the presence of such a diluent gas was, that a larger proportion of the combustible gas was able to enter into combination with oxygen at one time, on account of the action of dissociation being delayed, than was the case when pure oxygen was used. Bunsen showed that by successive slight undulations of temperature, successive quantities of gas entered into combustion, and that a mean temperature not very far short of the temperature of dissociation could thus be maintained. He, Mr Rowan, had referred to these matters in "Fuel and its applications" (Vol I. of Groves and Thorp's Chemical Technology, pp. 366-368). No doubt pyrometer records of temperatures actually obtained in practice would be very useful if they had sufficiently careful observations with a thoroughly reliable instrument; but until the advent of Le Chatelier's and similar electrical pyrometers such observations

Mr F. J. Rowan.

were scarcely possible. The theory or law that the transmission of heat was in direct proportion to the difference in temperature was much older than Fourier; Sir Isaac Newton announced it, but Fourier's and Professor Clerk Maxwell's application of it to metal plates brought it within the range of engineering practice. Mr Halliday had, he was glad to see, quoted Professor Clerk Maxwell's lucid statement of the theory, and it was likely to receive more attention now than was the case when he, Mr Rowan, reproduced the same formula in 1878, in "The Design and Use of Boilers." With regard to the later experiments of Dr Kirk, Sir A. J. Durston, and Mr Blechynden, it appeared to him that they, with perhaps those of Mr Yarrow also, were being pressed too far. They were not properly experiments on the transmission of heat, although some temperature estimations necessarily were made in their course. Dr Kirk's experiments were made (like Mr Yarrow's) to test the extent to which tube plates of different thicknesses could be damaged by excessive temperature. It was not possible with a dish such as he used, to have either a sufficient quantity of water, or adequate circulation in the small quantity which was employed, to properly conduct the heat which passed through the metal. The same might be said of the experiments of Mr Blechynden, and of the first portion of those of Sir A. J. Durston. The latter portion of Sir A. J. Durston's experiments had more bearing on the subject, because they showed, to some extent, how heat was gradually dissipated along tube surfaces. But even those experiments were only of partial interest, because they were made (as well as the others quoted) with smoke-tubes and none with water-tubes, and the conditions were widely different in the two kinds of surface. In short, the experiments were really experiments on the effects of heating on boiler construction, and not, or only indirectly, on the transmission of heat from gases to water in boilers. He would again protest that Mr Blechynden's experiments established only the ratio obtained in his apparatus, and not any general law. As long as such results remained on record, as those quoted by him in his reply to the discussion on his paper on "Water-Tube Boilers,"* it

* Trans. Inst. of Engineers and Shipbuilders in Scotland, Vol. XLI.

was quite clear that a ratio of heat transmitted to difference of temperature squared would not express all the facts. Both Dr Kirk's and Sir A. J. Durston's experiments also introduced elements of uncertainty in their use of fusible plugs. A junction of metals of diverse conductivities might produce both thermal and electrical effects which would interfere with true readings of results. On the whole, in this matter, as well as in others connected with boilers and their action, one might do worse than consider a remark made several years ago to the effect that: "Whatever can be said for or against the deductions of the experimenters referred to, they all involve the same error, namely, that of deducing a law of universal application from too small a series of experiments, in which factors having an undoubted influence were omitted." In fact, the reference to Professor Ser's experiments, with which Mr Halliday closed his paper, presented a pointed commentary on that view of the matter, as the element of velocity of travel of hot gases over the heating surface had been almost universally ignored.

Professor JOHN PERRY, D.Sc., F.R.S.—Was sorry to say that he had too little time to say much about this valuable paper, but as his name had been mentioned, and as the Secretary had asked him to make some remarks, he should do so hurriedly. The assumptions in his "Calculus" were Academic; he gave them as easy exercises on the Calculus which happened to be in his stock of notes; he was sorry now that he did not say that they greatly differed from the theory of flues which he was in the habit of giving to his students. He had often meditated upon the well-known French locomotive experiments quoted by Mr Halliday on page 58, and also on others, in which, when half the tubes in a locomotive boiler were closed up, there was practically the same efficiency, and he had for five or six years impressed upon his students the fact that it was only in bad boilers that actual area of heating surface was of importance. In fact, he had pointed out that length of flue divided by hydraulic mean depth, both in the flame and water spaces, gave the real determining factor in the efficiency of a boiler. He had also pointed

Prof. John Perry.

out that any source of increased friction in flues—anything causing a need for greater draught—increased the rate at which heat passed from gases to water. But he had no guiding theory, and he did not know that Professor Reynolds had given the necessary suggestion in his 1874 paper (Lit. and Phil. Soc. of Manchester). His eyes were opened by a paper read by Mr Stanton (of Owen's College) at the Royal Society, two years ago. He passed streams of hot and cold water through concentric tubes, and showed that the losses and gains of temperature per foot were practically independent of velocity. He (Professor Perry) pointed out at the meeting, how this cleared up their difficulty in understanding the French locomotive experiments and others. He at once (the same evening he believed) saw a working theory which might be briefly given as follows:—Let average velocity be V, average temperature (absolute) of gases be T, and temperature of metal be T. There was a layer of fluid at rest at the surface of the metal of a flue. Per unit area per second let N molecules enter this layer, giving to it axial momentum per second proportional to NV; this was what they meant by force of friction F per unit area, so that $N \propto \frac{F}{V}$. Now each molecule brought with it kinetic or heat energy proportional to T, and took away energy proportional to T_o. He was giving the theory in its very simplest shape, and neglecting heat resistance between layer and metal, and hence the heat per second per unit area, $H \propto N(T - T_o)$ or $H \propto \frac{F}{V}(T - T_o)$. Now in fluids $F \propto \rho V^2$ where ρ was the density, hence in gases H was proportional to V. That was an exceedingly important theory, he thought, however crude it might appear, as he hastily gave it. The papers of Professor Reynolds would probably give something very much more valuable to the diligent student, and some of the results were published in Mr Stanton's paper in the Philosophical Transactions. The crudeness and weakness of his (Professor Perry's) theory lay in his use of average V and T. He could not get at his notes just then, but it was easy to apply the above result to the case of gases at high

temperature on one side of a metal plate and water on the other, and to show that his early notions were borne out by the theory. Taking a small tube conveying hot gases, dragged through at enormous velocity, and a concentric tube conveying water in the opposite direction at great velocity; they had in that combination a method of giving up heat, which was fifty times as great as what occurred in an equal amount of heating surface in the best existing boilers. At present the metal resistance was $\frac{1}{100}$th or $\frac{1}{1000}$th of the whole heat resistance; he thought it possible to get nearly to the condition in which the metal resistance would be the most important heat resistance. That led to the result that the boiler of the future would burn its fuel under pressure in a very non-conducting chamber, and the products of complete combustion would pass with great velocity through very fine very thin tubes surrounded by water which was made to circulate with great rapidity, driven by a pump or injector. He begged to apologise for the hurried nature of these remarks; but it was a case of sending crude remarks or else sending nothing.

Discussion

Professor W. H. WATKINSON (Member) considered this subject of the greatest importance in connection with the design of steam boilers, and he wished to thank Mr Halliday for bringing it before the Members of the Institution. He regretted, however, that the author had treated the matter as if the main difficulty in the transmission of heat, from the hot gases to the water, was due to the resistance of the metal and to the resistances at the two interfaces. That method of treatment, although well known, had been of exceedingly little use to engineers, as it neglected, almost altogether, the real difficulties of the problem. The resistance to flow of heat through the metal, no matter what the nature and thickness of the metal might be, was in nearly every practical case so small that it might be ignored. The real difficulties of the problem were in getting the hot gases and the water to the heating surfaces and away from them again with sufficient rapidity; and the main difficulty was in dealing with the gases. In other words,

Prof. W. H. Watkinson.
the main difficulty was not the resistance to flow of heat (because that was always comparatively small) but the low temperature of the metal on the gas side, due to the imperfect arrangements for transporting the gas up to the surface and for immediately getting it away again therefrom. In some experiments which he (Prof. Watkinson) had made, an evaporation of over 50 lbs. of water per hour per square foot of surface had been obtained, and from later experiments he believed it possible to double that rate in practice, while maintaining an efficiency, as high as that obtained in first-class boilers. Those results had been obtained by arranging the heating surfaces so as to deal with each portion of the gas completely at one operation, instead of by the instalment system adopted in all boilers.

Mr C. E. STROMEYER (Member) said he could not agree with Prof. Watkinson's statement regarding the enormous rate of heat transmission. It should be remembered that when a heating surface was in contact with water on one side and air or gas on the other, the plate acquired practically the same temperature as the water, whereas a great difference of temperature existed between the plate and the gas. According to experiments in which the conditions were very favourable, about 600 thermal units per hour had been transmitted through a heating or cooling surface having water on both sides, per 1° difference, whereas, when the water was replaced by air, the rate of transmission was reduced to 2 or 3 thermal units per square foot per hour per 1° difference of temperature. With water on one side and air on the other that rate would be about doubled. But to transmit the same amount as if there were water on both sides would require differences of temperature from 100 to 150 times greater than in that case.

The discussion of this paper was resumed on 22nd November, 1898.

Mr C. A. MATTHEY (Member) remarked that one very important point which had to be decided, and which cropped up in every case of transmission of heat from hot gases through metal plates, was, whether the rate was simply proportional to the difference of temperature or proportional to the square of that difference. Mr Halliday had put forward both of these hypotheses, but he did not

sum up in favour of one or the other. Fourier and Clerk Maxwell were mentioned as being of opinion that the rate varied simply as the difference of temperature, and he (Mr Matthey) thought that was the general opinion. Over and over again he had heard people quoting Rankine as holding that view, but Rankine did not do anything of the sort. It was true he said something which looked, at first sight, as if that were meant; but, if the whole context of his remarks were read, it would be seen that he said the quantity of heat transmitted varied as the square of the difference of temperature. It was a question of the interpretation of the language employed, and depended upon what Rankine called the "rate of transmission." He did not mean by that the total quantity of heat transmitted per square foot, as was generally understood by that expression, but the rate of transmission per degree of difference of temperature, in which sense it was also used by other writers. Rankine said that, "The rate (*i.e.*, rate per degree) varied directly as the difference of temperature;" from which it followed that the total quantity of heat transmitted varied as the square of that difference. The passage would be found in Rankine's work on "The Steam Engine," pp. 259 and 260. The total heat passed into the water was there given as:—

$$q = \frac{T' - T}{\sigma' + \sigma + \rho x},$$

T′ and T being the temperatures of the two fluids which are respectively in contact with the two faces of the plate, σ' and σ the surface resistances of the plate, and ρx the internal metallic resistance; ρx being relatively inconsiderable, it might be neglected, and the expression written—

$$q = \frac{T' - T}{\sigma' + \sigma}.$$

Rankine then said—"It will be shown in a subsequent Article, that the results of experiments on the evaporative power of boilers agree very well with the following approximate formula for the thermal resistance of boiler plates and tubes:—

$$\sigma' + \sigma = \frac{a}{T' - T},$$

Mr C. A. Matthey.

which gives, for the rate of conduction per square foot of surface per hour,

$$q = \frac{(T' - T)^2}{a}. \text{ "}$$

It followed, therefore, that the total transmission varied as the square of the difference of temperature. This was strangely borne out in the paper by the actual experiments referred to by Mr Halliday. In Fig. 3, the curves, whose ordinates represented heat transmitted, and abscissæ differences of temperature, looked to the eye to be parabolic, and, on scaling them, he found that they were. Again, in the Table on page 54, Mr Halliday gave, in column 7, figures which showed that the transmission varied very nearly as the square of the difference of temperature, the discrepancies being quite within the range of errors of observation at such high temperatures. He was surprised that Mr Halliday had not summed up in favour of that theory; but, instead, he seemed rather to admire Clerk Maxwell's view that the transmission varied as the difference of temperature. It would appear that Clerk Maxwell alluded to the internal resistance of the plate, and not to the surface resistance. He (Mr Matthey) could see no abstract reason why the rate should vary one way more than the other; it was purely a matter of observation. He would ask whether it could not now be agreed whether the transmission was as the square, or simply as the difference, of temperature.

Mr ROBERT T. NAPIER (Member) said it appeared to him that, on the question of the transmission of heat from burning fuel to the water inside a boiler, it was quite impossible to draw the line between the quantity of heat transmitted by convection and that by radiation. Anyone who had experience of shipyard furnaces knew that it was quite possible to get clothes singed while standing in an atmosphere but little above the freezing point, which clearly showed that difference of temperature between the two sides of an object need not exist in order that the object in question might receive heat. Hot gas was a good radiator of heat, and radiation must go on concurrently with convection, right through combustion chambers or tubes to the uptake. As to the transmission of heat through the

Mr Robert T. Napier.

plate itself, his father had made experiments on that point some years before the foundation of the Institution. In those days there were engineers who advocated making boilers of copper, on account of the high conductivity of that metal; and, with a view to settling the question, a series of vessels were made, having bottoms of different metals and different thicknesses, ranging from copper $\frac{1}{30}$-inch thick to lead $\frac{1}{4}$-inch thick, and given quantities of water were evaporated in them. The result of the experiments showed that, the nature or thickness of the bottom of the vessel had practically nothing to do with the rate of evaporation. The time might arrive when it would be necessary to know accurately the greatest quantity of heat that a plate of certain thickness could transmit, but that day had not yet come. At present, the question how to accelerate the rate of absorption of heat by the *water* was the all-important one.

Prof. A. BARR (Member) remarked that he would emphasise what Mr Napier had said, by pointing out that Rankine was speaking of two different things in the two passages quoted by Mr Matthey. There was no doubt that the conduction through a plate was proportional, or very nearly so, to the difference of temperature of its two sides; but for a boiler question that was of comparatively little importance. They had to remember that the gases in immediate contact with the plate had the same temperature as the plate, which was always very low—never approaching a red heat. No doubt a considerable amount of the heat entered the plate by radiation from the fire or from the flame, and not by the contact of hot gases. First of all, advantage had to be taken of the direct radiation, in order to get the heat out of the gases; then the film of cooled gases, which was necessarily at the temperature of the plate, had to be cleared away as rapidly as possible. What engineers had to do was to cause the gases to flow over the heating surface with such rapidity that there was a continual approach of new hot particles to the immediate vicinity of the plate. He had frequently referred to this question at previous meetings of the Institution, but it could hardly be too often pointed out that it was necessary to arrange for the products of combustion to be carried as rapidly as possible through

Prof. A. Barr.

the tubes or over the plates. He thought that one reason for the great efficiency of the first portion of the tube in Sir John Durston's experiment, Fig. 5, was that, the motion of the gases was much more unsteady on entrance to the tube than it was after the gases had travelled some distance along the tube. Engineers often said that: "The flues of the boiler must be large enough to give the gases plenty of time to give up their heat." That was entirely wrong in regard to boiler design. If a certain quantity of coal was burned in the furnace, a certain amount of products of combustion was produced. Suppose that in one case these products were carried through circular tubes of 2 ins. diameter, then, with a definite area for the passage of the gases, and a certain amount of surface area for the transmission of the heat, they would get a certain amount of heat out of the gases. If in another case the same tubes were flattened so as to keep the heating surface the same, but making the passage way only one-fourth of an inch wide, then, if the same quantity of gases per minute were passed through these flattened tubes, they would get more heat out of them, because the gases were brought much nearer the surface in the second case than in the first; and, moreover, the rapidity of motion being much greater, the cooled film would be more effectively cleared away from the plate. It was this question which was the important one from the boiler point of view, and not the matter of the actual conduction through the plate. He was glad that Mr Napier had referred to the experiments made by his father, because, there were a great many engineers to-day who believed that high conductivity of the material was the all-important question. The all-important question was to get the heat into the plate, and for that purpose the necessary condition was a very rapid motion of the gases over the heating surface.

Mr G. HALLIDAY, in reply, said the view expressed in the paper concerning the condition of the plate, was that held by Lord Kelvin, that a kind of film formed on both the gas side and the water side of plates which transmitted heat from gases to water. In the case of the gas side, it was only necessary to imagine a very thin film to understand that a condition of things would arise which would give

a comparatively low temperature at the immediate surface of the plate, and a very high temperature at the gas side of the gas film. The thickness of the film might be $\frac{1}{100}$th of an inch, and the difference of temperature might be 1000° Fah. or more. The same condition of things held good on the water side of the plate. A film would also be there, and its thickness did not require to be very great to have a comparatively high temperature at the immediate surface of the plate, and a comparatively low one on the water side of the water film. These two phenomena were the great difficulties to be met with in the transmission of heat through plates. Fourier used some arrangement for brushing the surfaces, which kept them as free from film as possible, but it was doubtful if such an arrangement could be made practical with boilers. It was to be feared that these difficulties could not be overcome; they would have to be endured as well as possible. The resistance of the plate was comparatively *nil*. The difficulties regarding the gas and water films could not be too emphatically pressed home, and was Professor Watkinson quite accurate when he said that: "The low temperature of the metal on the gas side was due to the imperfect arrangements for transporting the gas up to the surface and for immediately getting it away again." ? He (Mr Halliday) submitted that, the condition of things was a physical phenomenon which could not be got rid of under ordinary conditions. There was always a film of gas attached to a plate, whether hot or cold, which adhered to it and would not leave it, and the heat had to be conducted through it with all its disadvantages. The experiments of Professor Watkinson, promised at Sheffield, to prove that the skin film difficulty had been overcome, had not yet appeared; but, whenever they were made public such experiments would be extremely interesting to practical engineers. Surely Mr Stromeyer was right, and his opinion was borne out by practice, when he said: "The difference between the power of transmission of gases next the metal and liquid next the metal were enormous, and under the most favourable circumstances one could only obtain a transmission of 600 thermal units per unit area per hour, per degree

Mr G. Halliday.

of difference of temperature, while with gas in contact with the plate the transmission was from 2 to 3 thermal units." The reason of the difference was obvious. Professor Perry had drawn attention to the work of Professor Osborne Reynolds, and to the later experiments of Mr Stanton, the results of which appeared in a paper read by him before the Royal Institution in 1897. He (Mr Halliday) had the idea that fluids travelled through tubes with a motion similar to a vortex ring, and he wrote to Professor Silvanus P. Thompson asking whether any experiments had been made to prove this. It appeared that Professor Reynolds had proved that water moved, under ordinary conditions, in straight stream lines, but when heated the motion became confused. The particles of water moved all over the cross sectional area of the tube, and this confused motion was accompanied by an increase of temperature of only a few degrees. He (Mr Halliday) believed that gases moved through tubes with a motion like that of vortex rings, at least they did not move through in straight stream lines. Now, the point was this, the friction of a wetted surface increased as the velocity of the water on the surface,* and it was to be expected that, the quicker a fluid moved through a tube the more nearly would the motion of its particles assume the motion of a vortex ring. At higher velocities the number of particles brought into contact with the surface of the plate would be greater, and the quantity of heat carried away from the surface by those particles would also be greater. If it were assumed that at the beginning of the motion of the water through the tube it moved in straight lines, it would not go far before its temperature would rise. In consequence, the straight line motion would be broken up and become confused, and fresh particles would come into contact with the surface as the water proceeded through the tube. If water flowed through a tube under those conditions, and

* [By actual experiment the late Dr Froude demonstrated that surface friction varied as the 1·83 power of the speed; and M. Risbec (see Bulletin de l'Association Technique Maratime, vol. v., p. 45) considers "it is more rational to assume that fundamentally skin resistance, involving as it does the energy of wave-making, will be proportional to the square of the speed."—Ed.]

received heat from the outside as it moved, then at a rate of one foot per second, so many particles would come into contact with the surface and take up a certain quantity of heat. If however the water were forced through at double the velocity, then, by the vortex theory of motion, the number of particles which came into contact with the surface would be doubled, and the quantity of heat taken away with the water would be greatly increased. Was the water used by Professor Reynolds allowed to fall through the tube with a velocity produced by its own weight? Was the speed varied? Mr Stanton's experiments had proved that: "The speed of the water through the tubes made no difference of temperature transmitted." Professor Ser had put the law in a better form. "The heat transmitted was almost directly as the velocity of the water through the tubes." That would be true whatever the fluid might be, and especially would it be true in the case of hot gases. Mr F. J. Rowan appeared to combat the law which Mr Blechynden had proved by experiment that, the quantity of heat transmitted per unit area was as the square of the difference of temperature between the hot gases and the water. In the experiments made by Mr Blechynden there was one disturbing factor—that factor was the plate. Fourier proved that a metal plate transmitted heat by conduction, and at a rate *directly* proportional to the difference of temperature between the two surfaces. But the water film on the one side, and the gas film on the other, transmitted heat in two ways, by conduction and by diffusion, hence the rate of transmission might be expected to be in the duplicate ratio of the difference of temperatures. Neglecting the resistance of the plate, and it was almost a negligible quantity, the transmission was as the square of the difference of the temperatures. It was pleasing to have it placed on record that, over 40 years ago Mr Napier had found, by experiment, that the nature of the plate or its thickness made little practical difference to the transmission of heat. Practical engineers, however, should remember that there was a difference when the thickness of the plate varied considerably. For example, when the thickness of the plate was $1\frac{3}{16}$ inches, and the difference of tempera-

Mr G. Halliday.
ture 1400° Fah., the quantity of heat transmitted would be 30,000 thermal units per square foot per hour, and when it was $\frac{1}{16}$-inch thick, the quantity of heat transmitted would be 50,000 thermal units. It was to be feared that Dr Barr had fallen into the same error as Professor Watkinson, when he said: "Then the film of cooled gases, which was necessarily at the temperature of the plate, had to be cleared away as rapidly as possible." He (Mr Halliday) thought with Lord Kelvin and Professor Reynolds that it could not be cleared away, because it belonged to the plate. One might clear it away temporarily, for an instant, at a particular spot, or perhaps it should rather be said disturb it, in a laboratory experiment, but it could not be done with the plates of a boiler. Was it right to say: "The film of cooled gases?" Might that not mean a film of constant temperature? Was it not better to say: "The adhesive film, almost infinitesimally thin, varied in temperature from the temperature of the plate on one side to that of the gases on the other, which would probably be from 400° to 2500° Fah. in the thickness of a bit of paper?" Professor Barr suggested making the hot gases go through narrower spaces, and thought, with the same area of surface, the proximity of the surfaces to one another would cause the gases to be more effective. Was this saying much for the theory of gases? Did Professor Barr hold that a gas particle going through a tube moved in a direct straight path, and that the plates should be brought near to it in order that it might give up its heat? James Watt was fairly old fashioned now; but, even he held that when steam entered the condenser the temperature immediately fell. Some might hold that the diffusion of heat across the section of a fire-tube would not be slower than that of steam. But it might be that narrowing the gas space would shorten the tube, make a lighter boiler, and require a more excellent automatic pump—the only question would be—Was it practical? The unlimited resources for experimental proof of which Professor Barr had command should soon settle that matter.

Mr Halliday was awarded a vote of thanks for his paper.

THE INTERNAL ARCHITECTURE OF METALS.

By Professor JOHN OLIVER ARNOLD.

Lecture delivered at Sheffield, June 15th, 1898.

PROFESSOR ARNOLD, delivering a lantern-illustrated lecture on this theme, said:—The subject of the internal architecture of metals was rather appropriate on the present occasion, inasmuch as Sheffield was the birthplace of the science of micrography, which had been inaugurated there by Dr Sorby thirty-five years ago. The work of Dr Sorby, however, was received with indifference, if not almost with contempt, by metallurgists in this country. As might have been expected, the new method of observation was utilised to some extent in Germany, but the plants there raised from the seed sown by Dr Sorby were, from a practical point of view, of a somewhat sickly growth. The internal architecture of metals had no reference to the old idea of metallurgists and physicists that, the mechanical properties of metal altogether depended upon the cohesion between the molecules. Lord Kelvin had described the size of a molecule by saying, if a single drop of water were magnified up to the size of the earth, then the constituent molecules would be proportionately about the size of marbles. That meant that the human brain was incapable of grasping the minuteness of molecules, just as it was incapable of grasping the vast magnitudes which separated the fixed stars from the earth. Fortunately for practical metallurgy, it was unnecessary, in most cases, to endeavour to ascertain the cohesion between the molecules of metals; as a matter of fact, the more important question was: What was the intercrystalline cohesion? In studying the question, even from an engineering point of view, it was absolutely necessary to obtain first

principles, and to obtain those, it was best to start to study the question on an absolutely pure metal, or, at any rate, a metal of 99·999 per cent. purity. If they took a piece of pure gold they found that it was built up of comparatively large crystalline grains, of which they saw junctions, but they would also notice that those grains appeared quite different in colour. That was an optical effect; the primary crystalline grains were themselves all built up of smaller crystals. Each one of the large crystalline grains contained hundreds of thousands of smaller crystals. The smaller crystals were at differing angles in adjacent grains. The secondary crystals might reflect the light almost entirely *outside* the objective when they examined them by the microscope, and the consequence was that such crystalline grain appeared almost black. In the next grain they got almost the normal colour of yellow gold, because the constituent crystals reflected the light *into* the objective; as a matter of fact, these differences in the look of the primary crystalline grains were purely optical. Gold was one of the most ductile of metals, and metallurgists for years had been face to face with the remarkable fact that if they took pure gold—a material of great ductility—and if to that gold they added only one-tenth per cent. of the metal bismuth, it became almost as brittle as glass. That mechanical fact was well known, and many theories had been put forward to explain so extraordinary a feature. However, the cause remained practically unknown until some ten years ago, when the metallurgical department of the College in Sheffield started vigorously to develop the work of Dr Sorby, and the matter became very simple. This section (shown on screen) exhibited a structure of pure gold into which about two-tenths per cent. of bismuth had been introduced, changing it from a highly ductile metal to a material so brittle, that if it were dropped on an iron plate it would fracture. The cause of that brittleness was that the *geometrical appearance* of the crystalline grains of the pure gold was gone, and they had highly irregular grains in an alloy containing one-tenth or two-tenths per cent. of bismuth. The latter metal formed a definite alloy with a very low fusion point, and

as the mass cooled, between the grains of pure ductile gold, they got thrown off a layer as it were, a cell wall of weak mortar composed of gold bismuth alloy; hence the brittleness of the mass. The next micro-section was viewed at a high power. There they saw the junction of three of the primary crystalline grains, also the small constituent crystals, and what appeared a great canal dividing the crystals of this gold bismuth alloy; as a matter of fact, the properties of the metal inside these lines of weakness were as good as ever. The metal was quite ductile. They might say that was rather a difficult point to prove, but he could give absolute proof of that statement. If they took such an alloy as this, and heated it to 300 or 400 degrees Cent., at that temperature it could be reduced to powder. These meshes of gold bismuth alloy became soft and pasty, and they could be separated by the pestle, the brittle alloy falling away, and thus they could get isolated grains; primary crystalline grains of the gold. He had done that, and had picked out two small grains of equal weight; keeping one and sending the other to the gold beater. The small gold grain which he showed represented none of the intense *brittleness* of the gold mass, proving that the bulk of the gold was unimpaired, and that they had brought about this remarkable weakness by having in the mass as it cooled a fluid micro-constituent, and wherever that obtained in steel or iron they had fatally weak metals. The excessively injurious effect of bismuth on copper was well known to engineers, and was easily determined by experiment. He showed a drawing of the original crystalline grains of pure copper in which the crystals were cohesive and face to face. If a small quantity of bismuth were introduced into that copper, which dissolved in the copper at a high temperature, then as the mass cooled the bismuth would come out, and place itself between the grains of the copper, and entirely break up the structure. That was a very simple explanation, and one that did not warrant appalling calculations on molecular distances, but could be seen with an ordinary cheap microscope of moderate power. He ventured to say that that class of observation was far more likely to be fruitful to engineers and metallurgists

than going too deeply into the question of molecular distances, as far as metals were concerned.

He would turn to one or two cases of more direct interest to marine engineers, but before his remarks would be intelligible it would be necessary to briefly trace the conversion or growth of iron into steel. If they got perfectly pure iron—a very difficult matter—they had crystalline grains belonging to the cubic system, and the crystal sections of pure iron would be seen in the divided lines shown. Then, when carbon was introduced, the carbon would not by any means diffuse itself equally through the mass of the iron; but would combine itself with a definite portion of it, forming a kind of definite alloy as the bismuth did with gold. In the case of iron containing about 0·45 per cent. of carbon, they had white irregular crystalline grains of iron, and large irregular grains of true steel. In that section the proportions of iron and steel were about equal, but intermixed, and each distinctly separate in the unhardened state. That was an important point always to remember in connection with structural steel, especially with castings, that a critical microscopical point existed at 0·45 per cent. of carbon, the point at which there was, in the material, equally balanced portions of the ductile iron, and of the comparatively brittle steel. If more carbon were added (say up to 0·6 per cent.), they produced a metal in which the steel grains were in the majority, and which presented the properties of steel rather than iron. If the carbon were kept down to 0·3 per cent., the iron crystals were in the majority, and the mass would possess the ductile properties of iron rather than the tenacious and brittle properties of steel. On the other hand, with 0·9 per cent. of carbon, the whole mass would consist of what might, for convenience, be termed true steel. If they went still further, and added more carbon (say to 1·5 per cent.), the mass would consist mainly of steel grains surrounded by a very hard pig iron, so to speak; in fact, they were now on the road to the formation of white iron. It had been long known to engineers that, the old idea that chemical analysis was going to solve everything had been exploded. They might have two pieces of steel identical in chemical com-

position, and yet their mechanical properties might be quite distinct. Take the case of a steel casting, for example. Before and after annealing, the chemical analysis was exactly the same, and though he did not propose to go into that question, he would like to throw on the screen a drawing showing the remarkable changes in the micro-structure produced after annealing a steel casting, which changes accounted for the mechanical properties very largely. He would show sections of the structure before and after annealing. It was hard to believe that they were the same metal; yet, as a matter of fact, they were taken off the same casting within an inch of each other. Practical engineers would be inclined to say—"Yes, that is all very well: But has that micrographical analysis ever been useful in explaining cases in which mysterious fractures have occurred in actual practice?"

A very few years ago he would, in all honesty, have had to answer that question in the negative. Fortunately, he was now in a position to place before them the details of three important and mysterious causes of failures in marine engineering, which had been submitted to him. In these researches the microscope had been of the greatest assistance in giving information in determining the causes of failure, as well as in eliciting the causes of what seemed to be mysterious fractures. These matters had been already published. He had been speaking the other day to a well-known engineer on the Clyde—a prominent member of the Institution, he believed—who said to him—"You metallurgists, in your reports, use such scientific terms that we cannot understand your papers." He would, therefore, explain these points, using, as far as possible, no scientific terms whatever. He thought the first case to which the microscope was applied in marine engineering was that of a fractured tail-shaft, which broke without warning, and with no apparent cause. As a matter of fact, it had been a long time running; but the examination under the microscope clearly showed that it had been cast from an ingot exceedingly hot, and afterwards liquation had taken place, so that the inside of the ingot was very much harder, and very much more impure than the outside; and the

brittle metal had in some measure separated itself, started the fracture, and worked its way through. Bearing in mind the growth of steel from iron, when they looked at the two sections shown, cut from the centre of the shaft, they would see that the proportion of steel there was very large, and that the proportion of iron was comparatively small. At the outside of the shaft it would be seen that the iron was distinctly preponderating, and the inside steel had a very much larger percentage of carbon. Independent of the percentage of carbon, it was steel with a dangerous fracture. If they examined it, as a whole, they would find irregular grains of steel, around which were layers of iron. If in a large mass there were cells of one material, surrounded by cell walls of another constituent, it was always a dangerous structure, and that accounted for the brittleness of that particular shaft.

The other case to which considerable importance attached was in connection with a battleship. The piston had been propped up for some operation, and it fell down four or five inches. The cross-head pin, some eight inches in diameter, snapped in two. That was hardly a condition of things in which a battleship could be expected to go safely into action. However, the question which arose, was whether the cross-heads, which had been specified to be of the finest quality of Swedish wrought iron, were really of the defined quality. The doubt arose whether they were really of Swedish mild steel, and that was the point to be settled. The analysis was such that it could not be said decidedly whether the material was steel or slightly carbonised iron. It was possible to have about 0·2 or 0·3 per cent. of carbon in the best Swedish iron. The microscope settled the point at once. If the material consisted of Swedish wrought iron, as the members well knew, it was made in sponges weighing about 2 cwts. These sponges had never been beyond the pasty state of semi-fusion. In the structure of these masses were included globules of slag. When that iron was forged, these globules of slag were drawn out into what was technically called the fibre, in the direction of the working, so that if a longitudinal section of such a piece were examined, they would find its primary constituent

of irregular grains of iron, with long dark lines of slag running through; but if a cross-section were taken, they naturally got an end view of these slag fibres. The section of this particular cross-head, however, presented the appearance shown by the lower drawing. It was mild steel. The bulk of the structure consisted of iron enclosing grains of true steel. That settled the question decisively when analysis had failed.

Another case submitted to the College by Lloyds' Committee was in consequence of the fatal explosion on board s.s. "Prodano," in which four men lost their lives. Some very interesting facts came out in that connection. It was well known that the Muntz metal, which was used for bolts in marine engineering, was apt to corrode through the action of sea-water, and particularly of bilge-water. A clue to the cause of the "Prodano" explosion was obtained by the micrographic analysis of a Muntz metal bolt which had been exposed for a long period to the action of bilge-water. He showed a section of the bolt cut through, showing a core of the ordinary bright yellow colour of the Muntz metal. The part outside was of a definite coppery tinge. On magnifying this to a high power, about 400 diameters, just on the junction of the coppery outside with the brassy core, they obtained the structure shown. The true brass consisted of two parts of copper and one of zinc, which formed a definite alloy. If the metal was half copper and half zinc, they got a certain proportion of true brass which showed as a yellow background. They had also the excess of zinc in the form of another definite alloy. The outer yellow brass therefore contained a proportion of two-thirds of copper, and this dark constituent contained probably two-thirds zinc. Where, in juxtaposition, two constituents were so different in their chemical nature, they had naturally present a difference of potentiality, and when a dilute acid came into contact with such a structure, it would set up a galvanic action, by which one would be dissolved and the other would remain intact. The action of bilge-water on Muntz metal seemed to be that it started from the outside. Why the action should be so irregular

he could not say. It might be determined by local circumstances. The bilge-water would contain, of course, salt, and it would probably be slightly acid. The result was that the true brass took the cathode position, and the high-zinc brass took the anode position, and dissolved out. That action would be clearly seen on inspecting the micro-section shown. The grains of the dark alloy were rich in zinc, and the other was the copper from which the whole of the zinc had been dissolved out. The copper was, of course, very spongy, and the whole of the mass was quite brittle. That was the section which gave them the clue which led to the discovery of the cause of the "Prodano" explosion. One difficulty in that case was this, that the pipe exploded at a pressure of only 130 pounds, whereas a piece of the same pipe—the unexploded portion—was tested by Messrs Kirkaldy, and it did not burst until a pressure of 190 pounds to the square inch had been recorded, and that was a feature of the occurrence which required a great deal of understanding. However, the unexploded fellow pipe of the "Prodano" was examined, and the brazing of that pipe was in such a shocking condition, that they could almost knock it apart with a hand hammer. The whole of the brazing should have presented a sound, light appearance of brass, but instead of that it could be seen that an action very similar to that in the Muntz metal bolt had taken place; as a matter of fact, the brazing consisted of isolated particles of sound brass, separated by large surrounding walls of brittle, spongy copper, with no strength in it, and in a few weeks this pipe also must have exploded. Taking the micro-section of the exploded pipe at the point of junction, and it was not abrupt as it appeared to the eye, the brazing was completely gone; at one part it was completely sound, and the network showed the insidious working of the galvanic action corroding it, and sapping the strength of the brazing in an outward direction. It became necessary to find out how this galvanic action came about, and it was discovered in rather a peculiar way; but he did not want to weary them by going into that now. It had been proved conclusively that it was due to the presence in the main steam-pipe of fatty

acids acting electrolytically, and those acids must have got in during lubrication, and every drop of such acid oil used would bring those unfortunate engineers nearer to their death. He went carefully into the question of the deteriorated brazing, of which he had obtained a considerable quantity from the steam-pipe of another vessel. It looked coppery, but it was of a darker appearance than ordinary copper, and powdered quite easily by hand in the mortar, instead of being ductile, and capable of flattening out like sound brass, while the specific gravity had gone down enormously. The structure, moreover, was quite spongy. He showed a piece of the original brazing usually used in pipes of this class, where a background of true brass was obtained, and floating in it particles of the alloy rich in zinc. He further showed a micro-section of a piece of the brazing after deterioration. It consisted altogether of a mixture of spongy copper, oxide of zinc, and fatty acids, and the change brought about micrographically was very striking. He took this opportunity in closing his remarks of strongly advocating the necessity, in this country, for research, particularly in the science of metallurgy. In this matter, there was no doubt that the Germans were far ahead. When on the Clyde the other day, he had been speaking to a well-known engineer—he believed one of their vice-presidents—and he suggested that he thought that the large engineering firms who had for a considerable period kept, so to speak, a staff of "dead heads," a staff not directly producing anything, but merely engaged on research, were now reaping the reward of their labour, and obtaining the cream of the engineering orders. He did not know how far such was the case, but he hoped to a very large extent, because, there was no doubt, whatever, that, as far as Germany was concerned, it was reaping enormously as the result of the work of the larger research staffs which German firms had kept in the past. Unfortunately, in this country he was afraid that the work of the student who devoted himself to research was not received very genially, at any rate, by the purely scientific societies; but he must not be discouraged if his researches did not command at first the attention he considered they deserved. This he might

exemplify by the case of Dr Sorby, who, after years of patient work, found his work ignored, and allowed to lie fallow for a quarter of a century before it received the world-wide recognition which it now had. To anyone engaged in research, especially to young men starting life, he could only commend those immortal words of Longfellow—"Learn to labour and to wait."

Discussion.

Mr JAMES GILCHRIST (Member) observed that they were greatly indebted to Prof. Arnold for the very excellent lecture he had delivered and the various illustrations he had shown them. He thought they would all agree with him in his remarks on the greater attention that should be paid to the architecture of metals. In the matter of the "Prodano" explosion, he had the pleasure of looking into that matter, and he was very much interested and struck by the results of the corrosion of the brazing. Professor Arnold referred to fatty acids. He (Mr Gilchrist) did not know how far the fatty acids had to do with it. He thought that as copper was so very liable to change at different temperatures, it was subject to disappointments, and they would have to look to some other material for their steam pipes in view of the higher temperatures which would obtain in the future, as copper was untrustworthy.

Mr JAMES B. MERCER (Associate) remarked that the idea of the corrosion of the zinc was an old and well-known one. Professor Arnold stated that oil was found in the interstices of the solder, showing really that there had been oil as the source of the mischief of the fatty acids. He concluded that this showed that the copper was a faulty material, but then it was scarcely fair to condemn the copper on account of the brazing joint. He would be sorry to let the remarks of the last speaker pass without attention. If enquirers would only consider the quality of the copper they were using, and not the question of a farthing per lb. on the price, that would be much more germane to the subject.

Mr J. MOLLISON (Member) said, in regard to Professor Arnold's remarks on the bursting of a copper steam-pipe on board the

s.s. "Prodano," he, at an early stage of the investigation into that case, brought to the notice of Lloyd's Society the fact that some copper steam-pipes that came under his observation a number of years ago, and which had been stored in a coppersmith's works on the rafters above the fires, were found, on examination, to have had the brazing of the joints completely wasted by the strong fumes from the fires. He would not, however, like to suggest that the fumes from an ordinary stokehold on board ship would affect the copper steam-pipes to any degree. He had no experience of deterioration by fatty acids, but he had tested steam-pipes which had been in use for many years in connection with common condensing engines, where considerable quantities of fatty acids passed from the boilers, and found no signs of such deterioration. It would be a very uncomfortable future to have before them as Marine Engineers, considering that three-fourths at least of all the steamers afloat were still fitted with copper pipes, if the limited quantity of fatty acids which passed through steam-pipes were to have such a serious deteriorating effect upon them. No doubt the high pressures, and consequent high temperatures, now in vogue went a long way to reduce the strength of the copper—about 20 per cent. at a temperature of 390° Fah.—and if coppersmiths were not exceedingly careful about the brazing material, and in the heating of the pipe in the operation of brazing, it might soon become deteriorated.

Professor ARNOLD, in reply said, with regard to some of the remarks, it should be clearly understood that in the case of the "Prodano" pipe it was merely a question of deteriorated brazing, and had nothing to do with the quality of the copper or any alteration in that quality, as the copper itself bent double without any sign of distress. Also, although low pressure steam might not have any effect, high pressure steam might aid the decomposition. Even when fatty acids had been liberated they would require oxygen present to render them coloured and acrid, and thus capable of acting on the brazing.

On the motion of the PRESIDENT, a vote of thanks was warmly

accorded Professor Arnold for his paper. The company then adjourned to luncheon, provided at the Cutler's Hall by the Reception Committee, Sir Alexander Wilson, Bart., presiding.

In the afternoon the Members of the Institution paid visits to the works of Messrs Charles Cammell & Co., Messrs John Brown & Co., and Messrs Walker & Hall.

Institution Dinner.

The Institution Dinner was held in the evening in the Cutlers' Hall. Mr George Russell, President of the Institution, occupied the chair, and among others present were the Lord Mayor of Sheffield (Ald. G. Franklin), the Master Cutler (Sir Alex. Wilson, Bart.), Sir Wm. Arrol, M.P., Col. J. E. Bingham, Prof. Hardwick, Dr Hicks, Prof. Ripper, Prof. Arnold, Messrs E. Vickers, C. H. Bingham, B. A. Firth, H. H. Andrew, R. Colver, Frank Mappin, Charles Ellis, W. F. Osborn, Sydney Robinson, George Senior, W. F. Beardshaw, C. F. Wike, J. F. Moss, C. A. R. Jowitt, G. W. Hawksley, T. Wilkinson, C. H. Gilbert Hay, R. Heber Radford, J. Sutton, H. K. Peace, J. G. Lowwood, J. E. Townsend, H. L. Howlden, John Ward, Andrew Patrick, A. S. Biggart, Henry A. Mavor, James Riley, Anderson Rodger, James Rowan, Prof. Archibald Barr, F. P. Purvis, John Thomson, Archibald Colville, and E. H. Parker.

After the loyal toasts had been honoured,

Sir Wm. Arrol, M.P., proposed "The City of Sheffield." He alluded to the progress of the manufacture of steel in Sheffield during the last 40 years, and was glad to say that tool steel, which was now valued most, came in larger quantities from Sheffield to-day than ever before. There was no doubt that the steel trade had been the making of Sheffield from a very early period. He remembered the doubts and fears which prevailed when the Bessemer process was introduced, and the trials that Sir Henry Bessemer had to overcome. The result of that and other improvements was that enormous quantities of steel, of better quality, could now be

obtained at a lower price than formerly. One of his Sheffield experiences was a visit to Col. Vickers in connection with the supply of steel for the original Forth Bridge, which was a suspension bridge. The steel links were to be made in sixty-feet lengths, and Col. Vickers, who had the contract, was, with himself, interested in the material to be produced. The steel used in the present bridge was made by the Siemens-Martin process, and he had no idea that it would be such good material. None of it came from Sheffield—two-thirds of it was from the neighbourhood of Glasgow, and the other third from South Wales—but a great deal of the tool steel used was made in Sheffield. The steel trade had reached such a pitch of perfection nowadays, that nobody could say he got bad steel if he was willing to pay a reasonable price for it. Sheffield deserved credit for what she had done during the last half-century, and as she had sons who had done well for the city in the past, he was sure there were still those who would do so in the time to come. Long might Sheffield's popularity and prosperity continue.

The toast was enthusiastically honoured.

The LORD MAYOR, who was very cordially received on rising to reply, said there was to-day more and more amongst Sheffield manufacturers the determination to take care that the quality of their manufactures should be as good in the future as in the past, and that it should never be said that in the present generation the good name and high reputation of Sheffield, for honest manufacture, was allowed to suffer. Comparing Glasgow with Sheffield, he said the cities had increased uniformly during the last century, the population of each having grown ten-fold. The ancient charter of Glasgow had produced much benefit to the city. The citizens had taken over property, and showed great foresight with regard to the navigation of the Clyde, street improvements, water-works, tramways, and the housing of the poor. He had noticed throughout all these manifestations of municipal activity that it had always been able to pay. That, he thought, was the Scotchman's characteristic. More than that, it was the characteristic of the business man, and therefore, provided the return from municipal socialism was sufficient to

Alderman G. Franklin.

repay the outlay, even although the credit of the city might be staked, the result was satisfactory. But directly they departed from that principle, and had recourse to the rates and taxes in order to bolster up and maintain a favoured class of tenants at the expense of the general body of ratepayers, they created a state of things which in its very nature could not stand, and which the people of Glasgow had not been slow to see. They in Sheffield, who did not receive their charter until 1843, had been able to follow, though at a respectful distance, the many steps which had been taken by the citizens of Glasgow in providing for themselves all those things which were necessary to maximise the advantages of urban life, and to minimise its inconveniences. Whether they looked at their waterways, tramways, or street improvements, if they applied the test which the citizens of Glasgow had always applied, they would not be doing wrong. Sheffielders in past times had had an uphill battle. They had not had what in Glasgow was known as the "common good fund" to fall back upon. They had nothing but their own right arms and their own breeches pockets, and with those two weapons they had gone forth to provide themselves, by joint effort, with all those necessities of civilisation which came upon them by reason of the crowded state of their population, and he thought that those who knew Sheffield to-day, and compared it with the Sheffield of a quarter of a century ago, had every reason to thank God that they lived in this year 1898.

Col. J. E. BINGHAM, in proposing the toast of the evening, "The Institution of Engineers and Shipbuilders," said Sir William Arrol had spoken of the steel of Sheffield, and it was very *apropos* that on that occasion they should have met in that hall of the ancient Guild of Cutlers' of Sheffield and Hallamshire, and tested their steel. Yorkshiremen resembled Scotchmen in many of their characteristics, and borrowing an engineering term, he hoped that this visit might weld together many friendships, which, like Sheffield products, well made, would stand the test of time; especially seeing how the interests of Sheffield were in touch with the engineering and shipbuilding trades. He was pleased to find

Col. J. E. Bingham.

that they had devoted so much time in endeavouring to diminish smoke, though he believed the great orders they had sent to Sheffield had much increased it here. He had little doubt some of them as engineers would discover a cheap and simple remedy for undue emission of smoke, for it was wonderful how necessity became the mother of invention. On their *menu* card was displayed the likeness of James Watt, a Scotchman, born at Greenock, of whom they were so proud. The dinner annually held in the memory of that great leader of their profession proved how they valued that power which he utilised—a power superior to the unassisted labour of many millions of men, which enabled them to fight commercial battles against nations with cheaper labour and less burdened by taxation. He coupled with the toast the name of the President of the Institution, Mr George Russell.

The PRESIDENT, in response, said the Institution was inaugurated in 1857. Professor Rankine was elected the first President, and under his able guidance the Institution very quickly developed, and included in its membership all the leading engineers and shipbuilders of the district. The object of the Institution was to promote the practice of engineering and shipbuilding by reading papers, by combining and harmonising theory and practice, as it was only by such combination that progress could be made. There was no standing still. The practice of the present was but the starting point for further improvements. He had just referred to Professor Rankine as the founder and first President, and he was glad that they had with them to-night their late President, Sir William Arrol. These two names of world-wide fame seemed to him to personify and embody the work and aims of this Institution. In the former they had the mathematician, the man of science, the theoretical engineer; and in their last President they had the man of resource, the practical engineer, ready in overcoming all difficulties, and bringing works of the greatest magnitude to successful completion. One reason for visiting this city was that although its fame was world-wide, comparatively few members had been here before, so that they were on entirely new ground. Further,

Mr G. Russell.

when they considered the intimate business connections which subsisted between Sheffield and the Clyde, and the admirable materials which Sheffield supplied, especially to the engineering and shipbuilding industries, they felt sure they would see much to interest and instruct them.

The toast of "Our guests" was proposed by Professor ARCHIBALD BARR, D.Sc., who said the members of the Institution had every reason to feel perfectly at home in Sheffield. Sheffield was undergoing the experience Glasgow had been subjected to in regard to its streets and its tramway system. It was fortunate for Glasgow that a large river did not run through Sheffield and give transport facilities to the sea; if it did the experience he had gained of the enterprise of Sheffield people led him to believe that the shipbuilding of Glasgow would very soon be located in Sheffield.

The MASTER CUTLER, in responding, said they felt it a great compliment to be the guests of such an important body as the Institution of Engineers and Shipbuilders in Scotland. He hoped the visit would be agreeable in every respect, and that "the chiels amang ye takin' notes" would not go empty away, but would print it on their memories that the people of Sheffield had been highly pleased to welcome them.

The toast of "The President," given by the Lord Mayor, was acknowledged, and the proceedings concluded by the company singing "Auld Lang Syne" with patriotic heartiness.

On Thursday, June 16th, the members of the Institution, with their friends, assembled in the Cutlers' Hall, at 9.30 a.m., and divided themselves into parties in order to visit the following works:—The Norfolk Works of Messrs Thomas Firth & Sons, Limited; the River Don Works of Messrs Vickers, Sons & Maxim, Limited; the Cutlery Works of Messrs Joseph Rodgers & Sons, Limited; the Electro-Plating Works of Messrs Mappin and Webb; the Clyde Steel and Iron Works of Messrs Samuel Osborn & Co.;

and the Dannemora Steel Works of Messrs Seebohm & Dieckstahl.

Luncheon, supplied by the Reception Committee and presided over by the Lord Mayor, having been partaken of, the visitors took special train to Worksop for a visit to Welbeck.

In the evening the Lord Mayor and Lady Mayoress gave a reception in the Town Hall on a scale quite in harmony with the lavish hospitality extended to the members of the Institution in other directions. The guests, of whom there were nearly 1,000, were received by the Lord Mayor and Lady Mayoress in the Lord Mayor's parlour, which, with several of the rooms set apart for the company, as well as the Grand Staircase, had been specially decorated for the occasion. An admirable musical programme was gone through, and later the Lord Mayor sanctioned an informal dance programme.

On Friday, June 17th, the visit came to an end with an excursion to Haddon Hall and Chatsworth. After spending a most enjoyable day in the inspection of those places the company repaired to Baslow Hydropathic, where dinner was served under the presidency of Mr George Russell.

At the close of the dinner Mr John Ward proposed the health of "Sheffield friends" and said, he wanted them to believe that their Scotch visitors would go home with hearts very warm towards Sheffield, because of the generosity and hospitality that had been extended to them.

Col. J. E. BINGHAM, who replied, said he hoped their visitors would go home and think as well of them then as they did at the present time. In the short interval they had been together friendships had been formed which would last for long, and he trusted before many years were over those friendships would be renewed.

Mr JAMES GILCHRIST having proposed the "Secretary of the Institution," Mr Parker briefly replied.

Mr JAMES ROWAN, the Convener of the Arrangements Com-

mittee, gracefully responded to the toast of his health, which was submitted by Mr John R. Richmond.

The party then entered the brakes and reached Sheffield at 11 p.m.

Throughout the meeting the members were favoured with exceptionally good weather. That, combined with the hospitality received, and the forethought displayed by the executive Committees in their arrangements, rendered the meeting successful in every way.

FORTY-SECOND SESSION, 1898-99.

INAUGURAL ADDRESS.

By Mr GEORGE RUSSELL.

Delivered 25th October, 1898.

GENTLEMEN—

At the opening meeting of last session, when I had the honour of addressing you briefly on the history and work of this Institution, I was able to announce that numerous papers of importance had been received or promised, and that we had the prospect of a prosperous session. This has been happily fulfilled. The papers were numerous and interesting, and led to animated discussions. Altogether the work of the session just closed has been of more than average magnitude, which is evidenced by the increased size of the volume lately issued, being the largest yet published by the Institution.

The attendance at the meetings was well sustained throughout the session, indeed, on several occasions this hall was filled to its utmost capacity.

The membership at the beginning of last session was 897, including all classes; while at its close the number had increased to 1068. This is very satisfactory, but we have as usual to lament the loss of several of our number by death. Among these, there is one honorary member, Sir Henry Bessemer, of world wide fame;

and one original member, Mr David Rowan, who took a most active part in the founding of the Institution, and in conducting its business for a very long period of years; he acted as President for the two sessions, 1870-72.

During the past session several meetings of Council were specially convened, at which careful consideration was given to the constitution and rules of the Institution. Several alterations had been suggested by members, which were thoroughly discussed and weighed, with the result that practically no proposal of importance found sufficient support to warrant any interference with the constitution, or the existing regulations. Although no alterations were found necessary, the time was not considered wasted, for the generally received opinion was confirmed, that the rules of this Institution, as presently existing, had been framed with great ability and foresight, and could not be easily improved in any essential points. Hence the proposed special meetings of the Institution, to which I referred last year, have not required to be convened.

The outstanding feature of last session was the very successful meeting held in June at Sheffield. This was only the second meeting of this nature in the history of the Institution, the first having been held at Newcastle-on-Tyne, 26 years earlier, in 1872. Those who went to Sheffield will, I am sure, always remember the kindly and hospitable welcome, and the admirable arrangements carried out by the local reception committee, headed by the Lord Mayor and the Master Cutler of that industrious and important city.

Many of the most celebrated works were open, and special arrangements made to exhibit to our members the important operations in manufacturing special products, so that there was much to interest and instruct their visitors.

By way of recreation, some of the best scenery in the neighbourhood of Sheffield, and many of the historic buildings within easy distance, were visited—fortunately under the most favourable weather conditions. These excursions gave great pleasure to those members especially, who were accompanied by their lady friends.

This second summer meeting was a great success, and would justify the Institution in holding a similar meeting before many years elapse.

Among engineering works in Scotland, lately completed, presently in progress, or projected, I may mention the Prince's Dock at Govan, and also the adjoining Dry Dock, known as the No. 3, which are the most important works yet completed by the Clyde Navigation Trust. The Prince's Dock, which was formally opened a year ago, has a total water area of 34·66 acres, and a quayage of 3764 yards, which, added to previously existing length of quays, brings up the total in the harbours of Glasgow to 8·36 miles. In 1862 the total length of quays was only 4376 yards, or rather less than 2½ miles; so that the progress made is very remarkable in this comparatively short period of 36 years, and bears abundant testimony to the enterprise of the Trust. There are storage sheds with upper floors, in course of erection; and there is being provided a full equipment of steam and hydraulic cranes, and other appliances, for dealing with coal and general traffic.

The No. 3 Graving Dock, lately completed, is immediately to the west of Prince's Dock, and of the following dimensions :—

Length, ...	880 ft. 0 ins.
Width at bottom, ...	81 „ 8 „
Width at top, ...	115 „ 0 „
Width at entrance, ...	83 „ 0 „
Depth of sill below high water,	26 „ 6 „

The contents are 14,000,000 gallons, which may be emptied in two hours. The travelling steam crane will lift 25 tons at a radius of 74 feet.

This is at present the largest graving dock in the world, and is capable of docking the largest vessels afloat.

But the graving dock, presently in progress, adjoining the Canada Dock at Liverpool, which will be completed next year, is somewhat larger. It will be 40 feet longer, 11 feet wider at the entrance, and

5 feet 6 inches deeper at the sill, the contents being 21,000,000 gallons, which are to be discharged in 1¾ hours. The travelling hydraulic crane will be able to lift 40 tons at a radius of 78 feet.

I may note here, relative to the subject of docks, that the largest floating dock yet built has recently been constructed on the Tyne, at Wallsend, by Messrs Swan & Hunter. The maximum lifting power is 12,000 tons, and it can raise a vessel of 11,000 tons displacement in 2¼ hours. It is 510 feet long, 111 feet wide, and 43 feet 7 inches high, and will accommodate a vessel 82 feet wide. It has been delivered at Stettin, to the well-known "Vulcan" Company of engineers and shipbuilders.

The new Glasgow Bridge is fast approaching completion, and it is expected to be opened for traffic some time next year. As its foundations have been sunk to a depth of 70 feet, and as it is being built in the most substantial manner, it is likely to stand for many centuries. The bridge which it replaces was a comparatively modern structure, only 20 feet narrower than the new bridge, and designed by the celebrated engineer, Telford. Its foundation stone was laid on 3rd September, 1833, so that its life has been only about sixty years. Had it not been for the shallowness of its foundations, which had become insecure, owing to the deepening of the river, the bridge itself might have stood as long again, a monument to the genius of its designer. The first bridge on this site had a life also of only sixty years. Its foundation-stone was laid on 29th Sept., 1769, and its foundations were 10 feet above Telford's bridge.

A bridge is now being built across the Clyde by the Glasgow and South-Western Railway Company, to replace the present bridge, which is only about twenty-eight years old. This is consequent on the scheme of providing four lines of rails between Shields Road and St. Enoch stations, to cope with the increasing traffic. The new bridge will have three middle spans of 84 feet 6 inches, and two end spans of 73 feet. The total width is about 52 feet, being exactly double that of the present bridge. The foundations are to be sunk to a depth of 60 feet. The five spans will be in the form of a continuous girder, having the bottom members arched between

the piers. The lower section of the piers, up to the spring of arches, will be granite, and the upper portion of Dumfries red stone. There will be a tower at each end of the bridge, rising to 32 feet above the rail level. The piers and towers will be built in the baronial style of architecture. The frieze and parapet will be of ornamental cast iron work. This bridge, altogether, will be exceedingly elegant in appearance, and an ornament to the city, as all such structures should be. At no distant date, some form of high-level or moveable bridge will have to be erected farther down the river than Glasgow Bridge, to form a more satisfactory connection between the north and south divisions of the city than the present ferries and tunnel afford.

In marine engineering, one of the most interesting developments is the application of a rotary form of compound steam-engine to the steamer "Turbinia," which has lately been built and experimented with on the Tyne. Her dimensions are 100 ft. × 9 ft., with a displacement of 44½ tons on a draught of 3 ft. She is fitted with three propelling motors, each having a shaft carrying three screws of 18 inches diameter, making nine propellers in all. At full speed, the engines run at 2200 revolutions per minute. The initial pressure of steam is 170 lbs. per square inch, expanded to 1 lb. before entering the condenser. The speed attained was 32¾ knots, which is far in excess of the speed of any other vessel, irrespective of size. That such a speed has been obtained by a vessel only 100 feet long is very remarkable, and the Hon. Charles Parsons, the inventor, expects that 40 knots will easily be obtained with a 200-feet. boat.

The total freedom from vibration, owing to the absence of any reciprocating motion, is a great advantage for a passenger steamer, and, if the principle can be as economically applied to large vessels, it will, no doubt, come into extended use. The Turbinia Company are presently building two sets of these marine engines, each of 10,000 horse power, and, when completed, their trials will be studied with great interest by marine engineers. The principle is similar to

the very earliest form of rotating steam engine, which was invented 2000 years ago.

The water-tube form of boiler continues to make headway, and has now been fitted to many merchant steamers. In the British and many foreign navies it may be said to be universally adopted. All the chief designs were very fully discussed here during last session, and the merits and defects of the various plans critically examined. The disadvantages appear to be more than compensated by the advantages, in the opinion of our naval authorities.

Among subjects deserving attention from marine engineers is the still frequent breakages in screw shafts. No part of a marine engine fails so often as the main shafting. The consequences of such accidents are always inconvenient and expensive, and generally very serious. There is, therefore, great inducement to discover a remedy; yet among the many improvements adopted in other details, the shafts are as defective as ever. Whether this is due to the flexibility of the hull, or to some other cause, there is here an important field for investigation and improvement.

Another form of disaster, which at intervals startles the public mind, and demonstrates the inefficiency of present arrangements for keeping afloat vessels which come into collision at sea, was illustrated only a few months ago. A large transatlantic French steamer was almost instantaneously sunk, by being struck on her broadside by a sailing ship of very much smaller dimensions, which resulted in a very large sacrifice of human life. Such catastrophes should be impossible if vessels were securely divided into water-tight compartments, and the communicating doors properly designed and attended to.

Turning now to locomotive engineering, our attention has lately been directed to record speeds in railway travelling on the main lines of the principal railway companies. Speeds have been maintained in regular daily working, which are quite unprecedented. The Caledonian Railway Company at present holds the position of running the five quickest trains in the kingdom, the speed of the Aberdeen express between Forfar and Perth being at the rate of

over 59 miles per hour. This is the fastest in the world, the next in speed is on the Northern Railway of France, the run from Paris to Amiens, being at the rate of 57·7 miles per hour.

Locomotives and rolling stock are now built much heavier than formerly, requiring heavier permanent way, and more substantial bridges It may be interesting to compare the locomotives of the present day with those of a generation ago. In the early sixties, the most advanced type of express passenger locomotive on the Caledonian Railway was designed by the late Benjamin Conner (an original member of this Institution) then locomotive superintendent. Its most prominent feature was the large diameter of its single pair of driving wheels, being 8 ft. 2 ins. Up till that time the driving wheels were gradually increased in each succeeding type; but since then the tendency has been in the opposite direction. The most modern express locomotives, designed by Mr M'Intosh, have two pairs of driving wheels 6 ft. 6 ins. in diameter. Continuing the comparison of these two types—the cylinders have increased from 17¼ ins. × 24 ins., to 19 ins. × 26 ins.; the total heating surface from 1172 to 1500 square feet; the working pressure from 120 to 175 lbs.; and the weight of the engine alone, in working order, from 30½ to 49 tons. The total weight of the modern engine and tender is 94 tons in working order, and its tractive force is 16,840 lbs.

Locomotion on ordinary roads has been greatly in evidence for the last year or two. Numerous new types of traction engines and motors have been experimented with, and many are now in constant use all over the country, not only for the transport of goods, but also as public conveyances for passengers, and as private carriages. Much diversity of opinion exists as to the best form of motive power. Many are of opinion that steam will still hold its position against either oil or electricity, but further experience will no doubt assign each to its own sphere. Steam will probably continue to be used for the heaviest traffic in goods.

It may be interesting to recall the facts that more than 60 years ago, steam carriages were constructed by Scott Russell, and were run regularly between Glasgow and Paisley, carrying passengers; and,

to go further back, that the first run on a steam carriage carrying passengers was made on Christmas Eve in 1801, by Richard Trevethick, the famous Cornish engineer (who introduced the non-condensing high pressure engine) so that motor carriages are not altogether a modern innovation.

During the past few months preparations have been commenced in connection with the projected Glasgow Exhibition of 1901. A large guarantee fund has been subscribed, the building plans have been determined on, and as many members of the committees, and some of the principal officials, will be the same gentlemen who bore a part in making the exhibition of 10 years ago such a conspicuous success, there can be little doubt that with their experience, the coming exhibition will, in all respects, be worthy of the City of Glasgow.

A series of great International Exhibitions have been held in Paris at intervals of eleven years, viz., in 1867, 1878, and 1889. The next one in 1900 will far surpass any exhibition which has yet been held. The Glasgow Exhibition will no doubt contain many exhibits from the Paris Exhibition, of great importance, that could not be expected to be prepared for Glasgow. The latter half of the nineteenth century has witnessed the inception and development of *International* exhibitions. Local or even national industrial exhibitions had been held before, particularly in France, so far back as the close of the last century. The first year of the half century (1851) saw the proposal of the late Prince Consort put into practice, of holding an exhibition of the products of the world in London. Through the genius of Sir Joseph Paxton, the Crystal Palace was erected in Hyde Park, and all nations were invited to contribute exhibits, and to visit the Exhibition. The nations generally responded to the invitation, and the opening ceremony was, perhaps, one of the most remarkable sights that had ever been seen in London. Representatives of all nations were there. Men from every clime and of every colour assembled to be instructed in arts, manufactures, and commerce. Eleven years later (1862) there was held the second and last of the

London International Exhibitions. Again the delegates from all parts of the world assembled in London to gain knowledge. These early exhibitions were taken very seriously, the prime object being instruction, not entertainment. But of late years, in exhibitions, one of their principal features has been amusement.

The tendency of international exhibitions has been to spread knowledge—which was formerly local or national—over the whole world. Fifty years ago this country was far in advance of other countries in engineering, shipbuilding, and general manufactures. The exhibition of machinery in motion, showing processes of manufacture, enabled the foreign visitors to copy, and emulate them in their own countries, and then establish competing centres for supplying the markets of the world.

The effect commercially on this country of such exhibitions has thus not been beneficial, but the reverse. Knowledge, however, cannot be confined to any one locality or country in perpetuity. It is bound to spread ultimately over the whole world. But these exhibitions have greatly accelerated the process, and shortened by many years the period of this country's lead in engineering matters. By exhibiting all we knew foreigners were able to get the benefit of our experience, and save the long and tedious time of evolution.

Fifty years ago the advantages of these exhibitions were very unequally divided, but at present they are more nearly balanced. The most advanced practice in engineering and shipbuilding is no longer confined to our country—for machinery of every class, as complete, efficient and powerful, and steam vessels as large and speedy, are produced in America and on the Continent. Indeed it is very noteworthy that the three largest steamers of last year were built in Germany, and that at present that country has the honour of holding the "blue ribbon" for speed in Atlantic voyages.

Glasgow is considered one of the chief centres of the world for the production of all kinds of iron pipes, yet within the last few weeks an American firm has contracted to deliver a considerable quantity of water-pipes for use in this city. Whether this circumstance is due to the local makers combining to keep up the price, or to the

Americans being willing to lose on the contract for the advertisement it gives them in foreign markets, I do not know, but merely note the fact as an illustration of international competition.*

When the nations meet now in International Exhibitions, it is on nearly equal terms, and each is able to contribute its share, and can certainly learn something from the others. Even in the "Far East," Japan, we find that in late years great strides have been made in engineering and shipbuilding. Vessels of considerable size having been completed in many of the yards. Further, that an Institution of Naval Architects was founded in Tokio about a year ago, which has already a membership of 250, who are all either naval architects or marine engineers. The first volume has been issued, of 38 pages and 12 plates, printed partly in English and partly in Japanese. This year a meeting was held on Sunday, 17th July, in Tokio, at which several papers were read; the first being *On Water-Tube Boilers*, so we may gather that that subject has as prominent a place in their transactions as it has in our own.

The trade rivalry between nations has its counterpart in that between localities, or even more pronounced, between firms engaged in the same branch of business. Competition has now become so keen, that in tendering for contracts the prices must be based on being able to produce on the most economical scale. This can only be accomplished by giving so much special attention, that it is only possible to succeed, in engineering works of moderate size, by limiting the variety of work as much as possible. Fifty or sixty years ago

* The much-talked-of water-pipe contract has come after all to Glasgow. A few weeks ago, it will be remembered, it was resolved by the Water Commissioners to accept the offer for 1000 tons of Messrs Wood, of Philadelphia, for the reason that Messrs Robert M'Laren & Co., of the Eglinton Foundry, had insisted on an advance in their terms because of the rise that had taken place in pig iron since the first tenders had been lodged. It appears that the American firm cannot guarantee delivery of the pipes, and at a meeting of the Committee it was agreed to give the contract to Messrs M'Laren, on their own amended terms.—*Glasgow Herald*, 1st November, 1898.

in the leading works of Glasgow or Greenock, marine engines, locomotives, stationary engines of all kinds, and millwright work, were all erected under the same roof. Now one of these branches is considered quite sufficient for any one work; and where more are undertaken the works are generally on a very large scale, and each department is kept as distinct as if it were a separate concern. The modern tendency is to limit variety, for commercial reasons, especially in America, where there are many firms who will make only one size of a special machine tool. Manufacturing repetition work constantly in quantity allows every detail to be carefully considered, and every improvement adopted, with the object of increasing the efficiency, and diminishing the cost of production. The result is that the purchaser of a machine is able to obtain it at a fraction of the price it would cost if made along with general work.

Engineers who have become noted for excellence of design or workmanship, who from experience and by careful study, keep on improving their products, are not infrequently copied by others who originate *nothing*.

The objects of industrial exhibitions and of institutions like our own are similar; to interchange ideas, and to contribute and receive information. So long as the giving and getting are mutual, and approximately balance, each exhibitor or author may be satisfied; but when the giving is not balanced by the getting, then the givers may justly complain. Those who exhibit their products or read papers, and so invite comparison and criticism, are worthy of all commendation; but it should rest with the exhibitors or authors alone to fix how much they are willing to give away. Any attempt to obtain special information, or copy designs, without first obtaining the consent of the owner of the information or designs, deserves reprobation.

The *design* of an efficient machine may be the result of many years of experience, careful study and calculation; and may be even held of more value than the materials and workmanship of which that machine is composed. It should therefore be considered as

dishonest to copy the design without leave, as to steal the materials of which it is composed. *Property in design* or invention should be honourably respected, whether protected by patent or not. There are many, unfortunately, who do not scruple to appropriate designs, and who will even use very questionable means to attain their object.

It does sometimes happen when tenders are invited for a special machine, and designs are asked to be sent with the tenders, that the best design is not the lowest in price, and the lowest in price is not the best. But the purchaser being anxious to have the best bargain, he is tempted to offer the contract to the lowest offerer if he will make the machine to the best design.

Another not uncommon circumstance is, that a firm having purchased and used some special machine or appliance which has given every satisfaction, one or more similar are required; but instead of ordering from the engineer who designed and supplied the pioneer machine, tenders are asked from persons for the number required, and opportunity given to copy the first machine. The persons, who by this arrangement obtain the design and data, which they could not originate, can well afford to supply the machines at less than cost price.

Yet another example of appropriation of designs may be mentioned, which is not unknown among boards, councils, or other public bodies. They require some special appliance, and entering into correspondence with some engineer, who is a well-known maker of what they want, ask all particulars, tender, and specification, perhaps also a drawing. The engineer, expecting to obtain the contract, gives them all they require; but, after he has parted with his special information, instead of the order, he receives a circular letter that tenders are requested for the said appliance, to be constructed according to the printed specification enclosed, which he discovers to be virtually the same specification that he had submitted himself, and is perhaps even illustrated by a "colourable" imitation of his own drawing, He then discovers that he has been acting as consulting engineer *gratis* in the public interest, and indi-

rectly supplying information for the enlightenment of his trade rivals, who have been favoured with copies of the documents referred to.

Many more typical examples of piracy might be cited, but these will suffice for illustrating how *property in design* is often appropriated, without the consent, and against the will, of the owner of this form of property.

In pursuing still further this topic of *property in design*, I would like to say a few words relative to the production of designs, and the necessary calculations which are made in the drawing office. In some cases the designs originate principally with the proprietors, in others with the manager, and in many with the draughtsman. It is manifestly the interest of the proprietors to retain possession as fully as possible of the designs originated in their establishment, whoever the designer may be. This leads to the question: What is the draughtsman's position in this respect? He makes the drawings either to the instructions of his superiors, or on his own initiative, or partly both (which is perhaps the most usual way).

If a machine is being designed of some new or improved type, it often happens that a great deal of time has to to be devoted to every detail, and many alternative methods considered. Drawings are made, which are immediately superseded by newer drawings as the design develops, and alterations and improvements are discovered, requiring, perhaps, intricate calculations to be many times repeated, which altogether amounts to a considerable expenditure of time and money. This represents the *cost* of the design, whether the machine is successful or not. Its *value* depends on the success of the machine. If it fulfils the object for which it was designed, and if there is a demand for similar machines, the design is at once imitated. One of the stratagems of the imitator is to entice the draughtsman to his employment, in order that he may thus obtain the coveted design, and so be able to compete with the engineer or firm who originated or bore the expense of the design, and whose property it is. Has the imitator, by employing the draughtsman, any right to expect a repetition of the design? Can the draughtsman honourably make a duplicate of the design? To what extent the

design could be honestly reproduced, would depend entirely on the position of the draughtsman while the design was being originated. If he was merely following instructions in preparing the drawings, he has certainly no right to copy any part whatever, because the ideas were not his own. But if he alone was responsible for the design, being engaged as an expert, then he would be at liberty to scheme a similar machine for his new employer, although, if he acts honourably, it could not be an exact copy; but, notwithstanding, it might be equally efficient, and in all probability improved.

No draughtsman or employé, under any circumstance, has any right to have in his own possession, without special permission, copies of drawings belonging to his employer. But the draughtsman who works intelligently will be observant of principles of construction, and try to understand the reasons for variation in design. He does not require notes or sketches of actual dimensions, but, understanding fundamental principles, he is competent to design, and does not require to copy.

While urging the recognition of *property in design*, and censuring those who are mere copyists, I do not mean to say that engineers are neither to look at nor consider the designs of other engineers. On the contrary it is absolutely necessary, to save the time of the *progressive* engineer, that he should know what has been already accomplished; not to copy, but to improve on what has been done by others. His object is, or ought to be, to excel in whatever department he has chosen, and to keep on improving, not contented with present achievements.

If we are to maintain even our present position in engineering among the nations, we must fully recognise the competition we have to meet from all parts of the world. We should not be content to follow, but determine to remain among the leaders, the originators, and the improvers.

To this end we require engineers able to design, as well as skilled artizans to execute the designs with the very best workmanship. At the present time we see trade all over the world in an active condition. In shipbuilding, this is likely to be the record year for

tonnage launched, and altogether the prospects for a period of commercial activity appear good. But the time will inevitably come round again, when supply and power of production will be found in excess of the demand, and prices will decline. And the depression will be all the greater the higher the prices are raised now, because high prices afford an opportunity of competition being established in new centres and in other countries.

The right policy, therefore, to pursue at present, is to keep down the cost of production as much as possible. But the tendency of recent legislation is in the opposite direction; by laying on additional liabilities and responsibilities on employers of labour. Besides, certain public bodies, as the London County Council, ostensibly in the interests of the employed, have lately sought to introduce conditions into contracts with engineers, of a most onerous and harassing nature, assuming a right to regulate the rate of wages to select and discharge foremen, and generally to interfere in the conduct and management of the contractor's works. All such conditions should be declined.

The one regrettable reflection in connection with the present extraordinary activity in shipbuilding and marine engineering, is that so large a proportion of tonnage is represented by war vessels; and that notwithstanding the overtures towards a permanent, universal, international peace, emanating from St. Petersburg, the era of brotherhood among the nations yet appears so distant.

But as the very national existence of this country depends on her navy, no expenditure can be deemed too great to maintain our first line of defence, so that absolute reliance can be placed in its ability to cope successfully with any possible combination of other powers. Preparedness is the best, and at present the only way of diminishing the chances of becoming involved in war.

While resolutely maintaining constant readiness for any emergency and conscious of the national strength to defend the integrity of this great Empire, on which the sun never sets, still the hope must be universally cherished that such a dire calamity as a European war may be averted, and that our Gracious Sovereign may spend the

remaining period of her life, and ultimately close her long and prosperous reign, at peace with all nations.

Sir WILLIAM ARROL, LL.D., M.P., moved a vote of thanks to the President for the interesting address he had delivered. He said he wished to express his pleasure at the advancement the Institution had made during the past Session. The President, Secretary, and Council were entitled to their best thanks for the manner in which the affairs of the Institution had been conducted. He hoped that during the current Session the Institution would make further progress.

The motion was unanimously adopted.

The PRESIDENT said he was much obliged to the Members for the kind manner in which his remarks had been received.

FEED-WATER FILTERS.

By Mr A. E. SHUTE (Member).

(SEE PLATES IV. AND V.)

Read 22nd November, 1898.

IN bringing forward this paper on feed-water filters, I feel that I am, to a certain extent, travelling over old ground, and consequently am inclined to think that the subject may not prove as interesting as it might have done, had it not been preceded by such admirable productions as the paper on the "Rapid Filtration of Feed-Water," read by Mr Edmiston before the North East Coast Institution of Engineers and Shipbuilders, at Newcastle, in February, 1892, and the article on "Feed-Water Filters," contributed by Mr Nisbet Sinclair to *Cassier's Magazine*, October, 1897.

Mr Edmiston's paper, and the discussion which followed it, covers the whole of the ground very completely, as far as the principles of filtration of feed-water are concerned, and it is still up to date in every sense, except, of course, in the matter of ways and means Mr Edmiston's own filter has been so improved that it is now hardly recognisable, and, as Mr Sinclair has shown in his paper, the number of different designs has greatly increased, each possessing merit and claim for notice from engineers.

There is no intention of treating this subject in chronological order, for there would obviously be no use in doing so. It is therefore proposed to put before you such examples as seem to be the most important, and which I am advised are the most popular.

There are other designs in existence, but it has not been possible to obtain any information regarding them.

Prof. Lewis, in his paper on "Boiler Incrustations,"* and, later, in his paper on "Boiler Deposits,"† emphasized the necessity of using

* Transactions of the Institution of Naval Architects, Vol. XXX.

† Transactions of the Institution of Naval Architects, Vol. XXXII.

some means of ridding the feed-water of the impurities known to be contained therein. Mr Sinclair Couper's paper, on "The Corrosion in Steam Boilers," * also points out the danger of permitting substances to enter boilers, which, when they do get there, work considerable havoc.

Mechanical filtration can only deal with matters in suspension, so there will be no pretence in this paper of dealing with those in solution. One may say with perfect truth, there is no need to do so, for by the great improvements in evaporators, which are really filters or separators dealing with matters in solution, no sulphate or carbonate of lime, or salt, need ever be found in a boiler. If the old-time bugbear of an engineer's life—boiler scale—has been done away with, there yet remain some substances to be dealt with, which can, and do, cause as much trouble.

The copies of various certificates of analysis of cylinder, filter, and boiler deposits, as given in Mr Edmiston's paper, show what these substances are. Take one, for example—that of some filter deposit which was found to contain 60·7 per cent. of organic matter and moisture, and 39·3 per cent. of mineral matter. Of the former, 37·8 per cent. was fatty acids, and 15·3 per cent. mineral oil; of the latter, 2·35 per cent. was copper. This sample was obtained from a ship on board of which cylinder oil was used.

In the three examples given by the writer during the discussion on Mr Sinclair Couper's paper, the proportions of oil and fatty matter are 29·5, 14·6, and 18·4 per cent. respectively, and, of copper, 1·15, 0·58, and 0·32 per cent. These three samples of filter sludge were taken from steamers where no cylinder oil was used. To simplify matters, it is proposed to deal only with oil and fatty acids in this paper, as there is apparently no information regarding the direct action of a number of other substances retained in feed-filters, together with the oil, etc.; and, as the writer is not a chemist, perhaps some of the members of the Institution may be able to say what their action would be. The substances referred to are zinc oxide, alumina, phosphoric acid, chlorine, magnesia, etc.

* Transactions Inst. of Engineers and Shipbuilders in Scotland, Vol. XL.

It has been proved that oil, when deposited on the heating surfaces of a boiler, is one of the chief causes of loss of efficiency, collapse of furnaces, and straining and buckling of fire-box plates.

No one, who has not had actual experience of the collapse of furnaces owing to oily deposits, can have any idea of the small quantity of oil necessary to cause collapse. Many have thrown doubt on the statement that collapse has been caused by oil, forgetting that oil is not likely to remain on a plate probably red hot—or at least hot enough to char it—and yet retain its original condition.

Forced draught has often been blamed for causing collapse; but, given a properly designed boiler, and no oil or scale, no degree of forced draught will cause collapse. It must be admitted, however, that forced draught will hasten collapse where oil is present on the heating surfaces. Prof. Lewis, in his paper on "Boiler Deposits," after mentioning how a certain deposit would lead to over-heating, refers to the manner in which oil, etc., is burned away or distilled off, leaving an apparently harmless deposit. I am of opinion that, this explains in a great measure the absence of any appearance of oil in a boiler, which is believed by some to be an indication that no oil ever entered it. From time to time, portions of the oil are taken up and deposited here and there; these adhere to the heating surfaces, and here incipient overheating of a small part of one of the furnaces, and there a slight buckling of a fire-box plate, may result. Perhaps neither of these may be noticed till, in course of time, the furnace or furnaces are found to be seriously out of shape; for, if the roundness of a furnace is once destroyed, the defect accentuates itself under ordinary working conditions.

Oil being lighter than water, one naturally thought that it would remain on the surface, but the following extract from Professor Lewis' paper will readily explain how it gets below the surface :—

"Having thus entered the boiler, the minute globules of oil, if in a great quantity, coalesce to form an oily scum on the surface of the water, or, if present in smaller quantities, remain as separate drops, but show no tendency to sink, as, their specific gravity being ·889, they are lighter than the water, and the difference in gravity is

probably even greater at the temperature existing in the boiler. Slowly, however, they come in contact with small particles of calcic sulphate and other solids; separating from the water, and sticking to them, they gradually coat the particles with a covering of oil, which in time enables the particles to cling together or to the surfaces which they come in contact with. These solid particles of calcic sulphate, etc., are heavier than the water, and, as the oil becomes more and more loaded with them, a point is reached at which they have the same specific gravity as the water, and then the particles rise and fall with the convection currents which are going on in the water, and stick to any surface with which they come in contact, in this way depositing themselves, not as in common boiler incrustations, when they are chiefly on the upper surfaces, but quite as much on the under side of the tubes as on the top."

Fatty acids can, and do, cause a good deal of the corrosion found in steam boilers, and this is borne out by a comparison of the matter taken from the holes left by pitting in the tubes of a boiler, referred to by Mr Sinclair Couper in his paper, already alluded to, with that given by myself, of some filter sludge. The erratic action sometimes observed in pitting, can be accounted for by the irregular deposit of fatty acids after they have been loaded and brought into circulation, as described in the above extract. They may be swept, by the currents existing in a boiler, against the shell, ends, fire-box sides, or the tubes; and where they stick they leave their mark.

Oil, if used at all—either directly in the engines or indirectly in swabbing piston- and valve-rods—should be purely mineral, and not mineral oil adulterated with vegetable or animal oils or fats. The latter, besides furnishing the fatty acids, are dangerous, from the property they possess of being converted into a state whereby they can enter into solution with the feed-water, and thus pass any filter made. Mineral oil does not possess this property in anything like so marked a degree, and can therefore be trapped on its way to the boiler. Filters have been condemned as useless because oils containing 5 to 20 per cent. of fatty matter have been used, the amount of grease found in the boilers after fairly long voyages being

consequently very great. In one case the use of pure mineral oil at once proved that the filter was not at fault.

Although oil is now rarely used in the cylinders of steam engines, the amount which is sometimes found in the boilers and elsewhere is surprising. Feed-water filters have been fitted on board steamers of the tramp class, and, notwithstanding the fact that no oil was used in the steam cylinders, yet a very few days' steaming showed that a distinct quantity of oil had been trapped by the filter. This oil had got into the engines during the swabbing of the piston and valve-rods.

On vessels where there are a number of auxiliary engines, such as electric light engines, and engines driving refrigerating machines, ventilating fans, etc., the quantity of oil trapped becomes greater, the worst offenders in this class being engines of the closed-in type, where the cranks work in a bath of oil, a quantity being drawn into the cylinders through the glands. If the glands are allowed to get slack in the slightest degree, the evil is accentuated.

Types of Filters.—The best-known feed-water filters are those of Harris, Edmiston, Alley & Maclellan, Rankin, Railton & Campbell, Kirkcaldy, Reeves, and Wotherspoon & Davie. All of these differ, more or less, the one from the other—some in the arrangement of the filtering medium, some in the kind of medium used, and some in other details of minor importance. Before describing them, something might be said as to the media used. It would be difficult indeed to mention a single fabric or substance of a seemingly suitable nature which has not been tried as a filtering medium. Silk plush, and various fabrics down to the homely cocoanut fibre door-mat, have been experimented with, as well as sawdust from all kinds of wood, both in its natural and in a roasted state, cork dust, charcoal, and coke. Of all these substances, I believe that coke was the first material used, for in 1884 my attention was drawn to an exceedingly primitive, but apparently effective, set of filters in use on board one of the passenger steamers running on the Loire between Nantes and St. Nazaire. These filters had to be fitted owing to the damage done to the water-tube boilers in use on that steamer by oily

and other deposits. The filters were formed by filling two large galvanised iron tanks with coke broken to about the size of road metal, the air-pump discharge being arranged so that either tank could be used, the feed-pumps, of course, drawing the water from the bottom after it had percolated through the coke. The idea of fitting the two tanks was that one could be cleaned without interrupting the filtering process.

About this time—1884—a filter with coke and zinc shavings as media, was designed by a well-known Clyde firm, and fitted directly to the air-pump discharge, Fig. 1. In this type, like the early Harris filter, provision was made for the use of zinc to neutralize the action of any copper or brass that might be in the feed-water. Harris used spongy iron as well as zinc, and in one of his early specifications advocated the use of the former in preference to the latter. He also mentions the use of an electric current passed through the layer of spongy iron, to facilitate the deposition of copper during the working of the filter.

Coke as a medium is too cumbersome for ordinary use, and, unless properly weathered to remove all impurities, is apt to prove injurious.

Woollen fabrics are not suitable at all, owing to their property of shrinking and becoming practically impervious to water unless under considerable pressure.

Cotton materials rot too easily, and are readily destroyed by heat.

Pure flax, properly woven and shrunk, is the only material, with the exception of jute, which can be said to have given completely satisfactory results.

The medium in all filters acts in the same way, the incoming water being divided into numberless small streams, which, passing through the minute passages in the medium, deposit on their way the grease contained in them. As grease has an affinity for substances of its own character, that already deposited causes more particles to adhere, so that the greasy debris arrested becomes a filter itself. In proof of this, it is found that, to slightly grease a set of clothes before placing them in a filter, causes them to arrest

grease much more rapidly than those which are put in dry and allowed to become saturated with water before they have time to collect a greasy film.

The best mesh for a fabric used as a medium can only be determined by actual experiment, and it should be of such a size as will permit of a sufficiently free passage for the water, yet at the same time be so small that it will do the maximum amount of work in clearing the water of its impurities.

Area of Medium.—The area of filtering medium exposed to the action of the feed-water is a very important point, and should be arranged to suit each individual case. The amount and condition of the feed-water to be dealt with should also be considered. By "condition" is meant the quantity of oil the water carries, or may possibly carry with it. To make this clearer, the following instances may be taken:—A filter designed to suit an ordinary cargo boat having engines of, say, 2000 I.H.P., would not be suitable for a first-class vessel having a faster running engine of the same power, and perhaps several auxiliary engines fitted as well. Again, a filter fitted on board a passenger steamer making short runs of a duration of, say, 10 hours per day, would not be large enough for a long-voyage vessel of the same power. Nor would a filter which is perfectly efficient for a screw steamer be suitable for a paddle steamer of like power.

If the quality and area of the medium employed in a filter are properly fixed, there should be no need for a double check, or double filtration, as in the case of the Harris compound type, Kirkcaldy, Admiralty pattern, and other filters. If the material is suitable, and the area it presents to the action of the water sufficient, then any excess is simply waste of space and good material, and, if the area is too small, then the dirt will be driven through the medium, and, in the case of the compound filter, will be found on the next layer.

The position of the filter between the air-pump and the boiler is pretty nearly always determined by the particular circumstances of the case. In the simplest style of engine, where there are no

independent feed-pumps, it is usually placed between the main engine feed-pumps and the boilers, with sometimes the feed-donkey so arranged that it can pump through the filter, and prevent dirt getting into the boilers when pumping from the hot-well, or the condenser, or from a dirty fresh-water river. In such cases the pressure in the filter is the same as, or slightly greater than, that in the boilers. Where independent feed-pumps are fitted, the filter is usually placed between the main engine pumps and the special pump, the water being passed through it at a very low pressure. The Admiralty practice is, in most cases, to have two sets of independent feed-pumps, and none on the main engines, the water passing from the air-pump to a hot-well tank, from whence it is drawn by the first feed-pump and discharged through the filter into a feed-tank, which is a reservoir for the supply to the feed-pump power. Some deem it inadvisable to put the filter anywhere except between the feed-pump and the boiler, because of the possibility of some oil getting into the water from the glands of the pump, through which it has to pass, as in the last instance.

The filters just referred to are styled delivery or pressure filters, and are the most numerous.

Within the last few years, however, a demand has arisen for a different class of filter; viz., a low pressure, or what is termed by some, a suction side-filter. This is a development of the oldest form, as the old-fashioned coke box was a suction side as well as a gravitation filter in principle. In this latest type the area of medium is considerably greater, this being necessary owing to the fact that there is practically no head of water to overcome the resistance of the medium, the water being drawn through by the feed-pump.

In an up-to-date steamer a feed-heater is a necessity, and the question naturally arises as to which side (inlet or outlet) of it the filter should be placed. Without doubt, the filter should be placed on the inlet side, and that for two reasons — (1), because, if the feed-water is first heated, the grease is of a more fluid nature, and is not so readily trapped; and (2), because in the case of a pipe-heater the grease very quickly gathers on the tubes, and

reduces their efficiency, thus causing a consequent waste of steam.

Space Occupied.—The space available is often very small, as in the case of men of-war, on board of which the filters are sometimes confined to the bilges, there being no other place to put them. For this reason, they should be designed with the greatest possible area in the least possible space.

Accessibility.—Accessibility should be one of the foremost features in a filter, as there is very little time to spare in an engine room, the engineers often having as much as they can attend to without being troubled with a dirty filter, perhaps at a time when their attention is needed elsewhere. Some makers arrange the medium in such a way that it can be changed very quickly; others provide cocks through which soda is introduced and the resultant filth blown out; while others depend on the action of steam and the reversal of the current of water to quickly cleanse the medium. Soda is not very effective, as it has very little, if any, effect on mineral oil, and it tends to rot the cloths, especially if any is allowed to remain inside the filter while lying in port. A good blow through with live steam is about the surest and quickest way to get rid of accumulated dirt.

Harris Filter.—The filtering medium in this filter, Fig. 1, is disposed in layers between discs of wire gauze, which in their turn are laid in suitable recesses in brass grids; the medium or cloth overlapping the outer and inner edges, so that, when they are compressed by the screw on top, a watertight joint is formed between them.

In Fig. 2 the feed-water enters the filter by the valve A, fills the aunular space between the shell and grids, passes in through the ports shown in the periphery of each alternate grid, through the upper or lower layer of medium, and then into the central duct by the ports shown in the inside circumference of the grids. This central duct communicates with the outlet valve, B, and the main feed-pipe, C.

When the medium becomes foul, a greater resistance is offered by it to the passage of the water; consequently the pressure rises

gradually on the inlet side till it equals the load on the automatic bye-pass valve, D, which then lifts, and allows the water to pass direct to the feed-tank, second feed-pump, or boilers. The electric alarum and the automatic bye-pass valve are distinctive features in this filter. They are easily and quickly adjusted, and work admirably in practice; the intention of the inventor being to provide a means of preventing the driving through the medium into the boilers of an accumulated mass of filth which may have been arrested by the filter.

The cleaning of this filter is very easily performed. The inlet A is first shut, and the large sludge valve E quickly opened. This causes a reversal of the current, so that it passes through the medium in exactly the opposite way to that by which it did under working conditions; and, by so doing, the dirt deposited is rushed through the valve E into the bilges, or over the side. This cleaning by reversal of the current can be done without injuring the medium, as it is protected on both sides by wire gauze. Very little water is lost by cleaning in this way. A steam valve, F, is also fitted, so that the greasy matter can be softened and rendered more fluid, and consequently more easily removed. Two pressure gauges are fitted —one connected with the inlet, and the other with the outlet, side— so that the resistance due to the deposit can be readily ascertained.

Figs. 3 and 4 show another type of the same filter, the bye-pass in this case being contained in the apparatus itself. This type is otherwise the same as the last, except that the flow of water is from the centre instead of to it.

Fig. 5 is a comparatively new type, specially designed to suit cases where immense area, combined with very small weight and space occupied, are required. The weight of a pair of these filters, suitable for engines of 7000 indicated horse power, is only a little over 1000 lbs. The area of medium exposed to the action of the feed-water is over 18,000 square inches, while the space occupied, taking the measurements over valves, is about 20 cubic feet. This economy in weight is obtained by using a special alloy composed largely of aluminium, the grids, valve-chests, covers, and hand-wheels being all made of this metal.

These filters are rightly described as low-pressure ones, as the automatic bye-pass is adjusted to work at a resistance of 2 lbs. per square inch. In one instance which came under the writer's observation, the gauge on the outlet side showed a vacuum of 2 inches after the filters had been working some considerable time. Fig. 6 shows a plan of the grids and valves, the bottom of the case being the hot-well. The water flows into the filter through the valve A and under the valve B, which is an escape as well as a sludge valve. After passing through the pipe, the water enters the central duct, and is distributed among the different layers of medium, the action in this case being the same as in the filter shown in Figs. 2 and 3. Fig. 7 is reproduced from a photo of a pair of grids.

Fig. 8 is a double or compound filter of the Harris type. The chamber A is filled with sponge, through which the water passes before entering the secondary filter, where it is again filtered in the manner before mentioned. When dirty, the mass of sponge is compressed between the two grids, which are brought together by a screw, as shown, the sludge being forced out through the sludge valve; a reversal of the current or a puff of steam helping the operation. The secondary filter is cleaned in the same way as in the case of Fig. 2.

Figs. 9 and 10 show a compound filter arranged with the bye-pass and valves contained in the filter case.

Fig. 11 represents the compound filters as fitted to the T.S.S. "Campania" and "Lucania."

Fig. 12 illustrates the simple filter fitted to H.M.S. "Eclipse."

Alley & M'Lellan Filter.—Fig. 13 shows a filter of the Alley & M'Lellan type, known as "The Sentinel Multiple Feed-Water Filter."

The filtering mantles A are carried on perforated brass tubes B, which, mounted on a casing C, is free to swing round on a central spigot D. This casing can be actuated by means of a central shaft D^1 passing through the cover, an ordinary spanner being used to turn the shaft. The mantles are so arranged that by turning the central shaft D^1 they can be brought in succession under the opening E, on which the small oil dome F is placed, so that by taking this

dome off each mantle can be removed in turn and a new one put in its place.

Rankin Filter.—Figs. 14 and 15 illustrate the Rankin filter, the general arrangement in both cases being somewhat similar to that shown in the Sentinel type. The filtering medium is of a similar nature to that used in the Harris filter.

Railton and Campbell Filter.—The Railton and Campbell filter, as shown in Fig. 16, differs from the two last-mentioned, in that the cylinder, around which the medium is wound, is deeply corrugated.

Kirkcaldy Filter.—Fig. 17 shows a Kirkcaldy filter, which consists of a cylindrical chamber wherein a series of dome-shaped gratings are disposed one inside the other, the water having to pass through the series.

Wotherspoon and Davie Filter.—Fig. 18 represents the Wotherspoon and Davie filter. In principle it is very like the early forms of the Edmiston and Harris filters, in which the water was forced through a number of layers of cloth, but in this instance an arrangement is provided whereby the medium can be compressed so as to squeeze out the grease collected by it. As there is no spring in the layers of fibre and cloth used in this filter, an elastic disc has to be fitted to secure the return of the grids and layers of medium to their proper position.

The filter shown in Fig. 19 is a very simple apparatus, and to a certain extent differs completely from any of the others just mentioned, in so much as the medium is a mass of specially prepared sawdust. The water from the hot-well enters the chamber, and passing through the top cone permeates the sawdust and escapes through the bottom cone (which is lined with wire gauze to prevent the escape of the medium) to the outlet valve. A supply of hot water is taken from the water space of the boiler, for the purpose of blowing out the oil-laden sawdust when the filter requires cleaning.

Fig. 20 illustrates a type of filter used in the British Navy. Each of the elements is composed of three layers of medium, and is held in position between perforated plates which slip into grooves

formed in the projecting cast iron brackets, as shown. These layers are arranged so that one can be slipped out, and the cloth cleaned or changed, without disturbing the other two, the current of water being diverted through the bye-pass during the process. This is a low-pressure filter, and is placed between the hot-well feed-pumps and the feed-tank.

Edmiston Filter.—The filter manufactured by the Glasgow Patents Co., under the Edmiston Patents, is illustrated by Fig. 21. In this filter double filtration is provided for by placing one cylinder covered with medium inside another, a spigot at the bottom and a flange at the top keeping them in place.

It will be noticed from the foregoing that the various types of filters may be separated into three classes: the first when the medium is in layers one above the other; the second where it is wrapped round cylinders, either plain or corrugated; and, the third where the medium is a mass of some material which the maker has found to be best suited for his requirements.

In conclusion, I desire to tender my thanks to the Glasgow Patents Co., the Harris Filter Co., Messrs Kirkcaldy, and the Reeves Filter Co., for the assistance they have given me in putting together information which, it is to be hoped, will prove of interest to the members of this Institution. I wish also to acknowledge the great help received from the papers written by Professor Lewis, Mr J. B. Edmiston, and Mr Nisbet Sinclair, in preparing this communication.

Correspondence.

Mr NISBET SINCLAIR (Member)—For many years filters have been used on board river and coast vessels to clear the feed-water, taken from rivers, estuaries, and harbours, of sand, mud, and organic matter held in suspension. In 1874, the first big merchant ship provided with triple-expansion engines, and water-tube boilers using fresh water, was fitted by Mr A. C. Kirk with a filter tank filled with gravel and charcoal, to relieve the feed-water of some of its grease. In American ships, the adoption of a tank filled with

Mr Nisbet Sinclair.

hay, or a box with a series of vertical divisions, to trap the grease from the feed-water on its way from the hot-well to the feed-pumps was not a new feature. The "Waas Extractor" was a development of that kind. Mr Shute's paper was both interesting and suggestive, as it raised a number of questions for discussion; many of which could be cleared up from the now considerable experience of the working of feed-water filters on board ship. In preparing his "Cassier" paper he (Mr Sinclair) set about the collection of information by submitting the following questions to filter-makers :—

1. Analyses of feed-water before and after passing the filter.
2. Analyses of the matter collected on the filtering medium.
   "Note."—In both cases the character of the medium, the time during which it was in use, and the speed of water through its surface should, if possible, be given.
3. Description of the filtering medium you employ in your filters.
4. How often should the filtering medium be changed?
5. In your filter: How long does it take to change the filtering medium for small powers, say 1000 I.H.P.; and for large sizes, say 10,000, 15,000, 20,000. and 30,000 I.H.P.; or for the subdivisions of these large powers that may be in use?
6. What position does the filter occupy in the feed system, that is—Is it placed on the suction from feed-tank;
   (*a*) or hot-well;
   (*b*) or on the discharge to the feed-heater;
   (*c*) or on the boiler-pump suction from feed-heater;
   (*d*) or on the boiler-pump discharge;
   (*e*) or is it ever in your practice placed on the steam exhaust from the main engine or auxiliary engines to condenser?
7. Which of these arrangements gives the greatest satisfaction?
   (*a*) as to convenience;
   (*b*) as to efficient filtration.
8. For the various cases of (6): What is the pressure of feed or exhaust steam before and after passing the filtering medium?
   (*a*) When the medium is clean;

(*b*) When the medium is as foul as it should be allowed to be?

9. Do you find the interposition of your filter makes any difference in the pulsations in the feed-pipe. Does it increase or decrease irregularity of pressure during each stroke of the pump? How does it affect the steam pressure in the auxiliary exhaust-pipe, or the lower line of an engine indicator card?

10. For the various cases of (6): What area do you provide, or at what speed do you pass the feed-water through one stratum of filtering material?

11. Have you any plan of blowing through the filter so as to assist cleaning, or to avoid opening out?

12. Do you use steam or an alkali; and in which direction do you blow? Do you find either to be effective? If alkali: How is it introduced?

13. Do you use a pot to receive the blown-out dirt, and can that dirt be cleaned out without opening up the filter-chest?

14. Do you find your filter affected differently in ships having salt water feed make-up, and in those having distillers to give fresh water for feed make-up?

15. Do you modify the filter you make for fresh water to suit it for salt feed? If so: How?

16. Do you find that the matter filtered out in any of the cases above noted, or others, is of such a character that it injures the material of the filter-chest or its internal fittings, if these are made of cast iron, wrought iron, or wrought or cast steel?

17. Do you think from your experience that for any other reason than for that of *lightness* it is necessary to have *brass* internal fittings?

18. In what condition have you found the boilers before and after the use of your filters in the two cases?

(*a*) When only fresh feed was used;

(*b*) When salt auxiliary feed was used.

The filter-makers, with much courtesy, took considerable pains

Mr Nisbet Sinclair.

with their replies to the questions, and as these had been embodied as fully and fairly as possible in the "Cassier" paper, which was accessible to all, repetition would be redundant. At the same time there was great room for expanding the consideration of these questions, the further examination of one or two of which he felt particularly interested in. The outcome of his investigations of No. 16 question was; "That materials of which filters were constructed varied in the different services, cast iron shells and wrought iron or brass grids being used in the merchant marine service, where weight was not important, while wrought steel shells, or brass shells and brass grids, were used in ships of the Navy. With a view to lightness, Mr Anthony Harris had experimented with alloys of aluminium, some of which he had found to be about as strong as steel and of only one-third the weight of gun metal. Having tested their endurance in the oily feed-water, he was now fitting them on board torpedo-boat destroyers, where their lightness was a feature of much importance. If the oily deposit was arrested because it would damage the boiler when admitted to it, it seemed probable that the filter might require to be made of special material to resist the destructive action of its more concentrated and therefore more active contents. While, generally, filter-makers had not experienced appreciable deterioration in their filters, some observant engineers asserted that the deposit softened cast iron, and ate away the ends of wrought iron or steel grid tubes; that brass was least sensitive to the corrosive action of greasy deposit, and should alone be used for cases and fittings. To this conclusion it might be objected that a small quantity of cupric compounds from the brass filter might be more dangerous to the boiler than a much larger quantity of iron compounds, that it was better to sacrifice the filter than the boiler, and that therefore iron or steel alone should be used." He would particularly like to ask Mr Shute about the endurance of Mr Harris's aluminium grids, because on certain American Navy ships, aluminium non-return valves were fitted for lightness, but they corroded so very rapidly in the bilge-water that they had to be abandoned forthwith for brass. He did

Mr Nisbet Sinclair.

not know, however, just what the composition of the American aluminium alloy was; very possibly it was not the same as Mr Harris employed. Superintending and inspecting engineers had been watching details of this kind so closely, that perhaps they might be able to throw some light on the corrosion that had taken place in filters. Another question which he would like to have seen discussed more fully in Mr Shute's paper was the area of filtering surface that should be provided for a given steam plant. The mode so much adopted of making the area a multiple of the area of the feed-pipe was so obviously crude, since the speed of feed-water through feed-pipes varied in different ships from 200 to 1000 feet per minute, that it was almost superfluous to suggest to engineers that the area should be settled by the quantity of feed-water which passed through it, and by the speed per minute through the filter-cloth that was found to be effective; and further that the area coefficient should vary with the character of the plant, that was to say, with the amount of oil which would find its way into the feed-water. It did not appear difficult to determine that co-efficient, and so to fix filter areas, for all circumstances, in a fairly reasonable way. It was evident, as Mr Shute had pointed out, that if the plant had a large number of auxiliary steam engines, the quantity of oil which would find its way into the feed-pipes would be much greater than in the case of a plant which had only one large engine, and so for the same filtering medium the co-efficient of area per lb. of water at an effective velocity would vary in the two cases. If the filter areas were determined by both users and makers on such a basis, the cost of filters for a given purpose would be determined by skill of design and manufacture, and any modifying question of lesser or greater area for the same purpose, at present provided by different makers, would be lopped off. It would be interesting to know what were the results of the experiments with coke and zinc shavings as filtering media, mentioned by Mr Shute. Was the zinc dissolved? What was the resulting salt, was it found in the filter-box or in the boiler, and was it quite evident that the effects were useful or not, before it was abandoned?

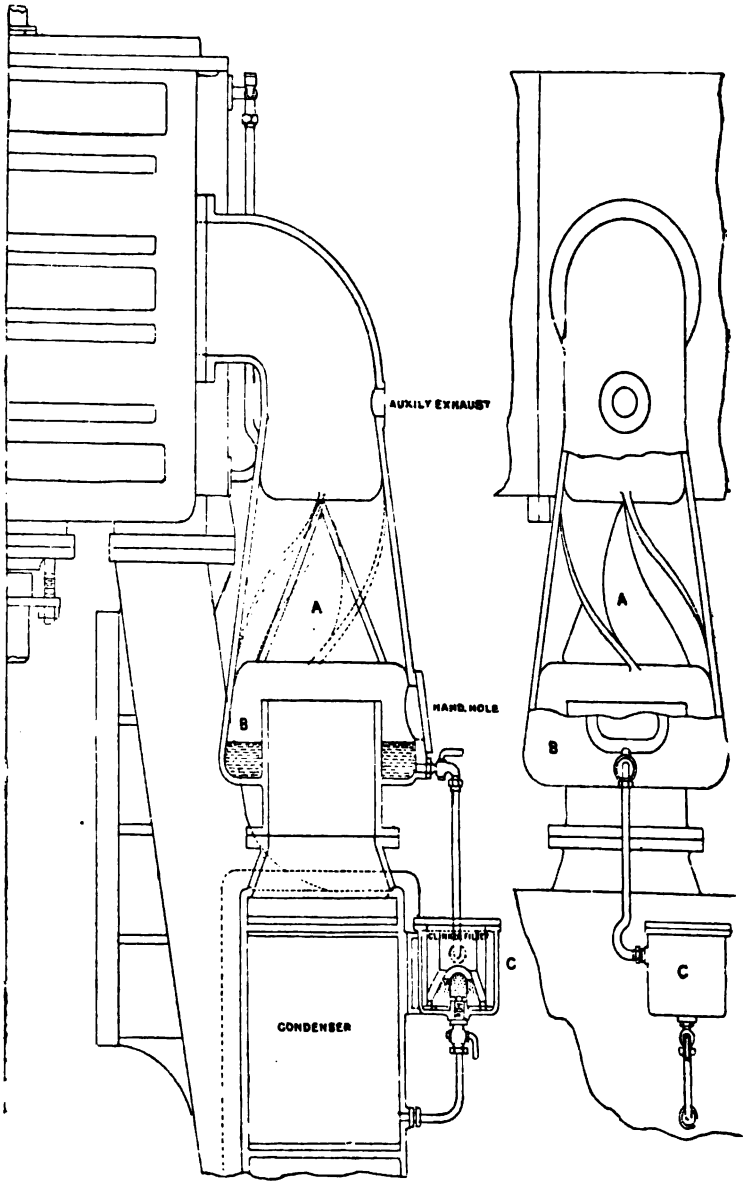

Fig. 22.

Mr W. Crockatt.

Mr W. Crockatt (Member)—As the oil which caused the trouble in boilers came from the cylinders, the right place to

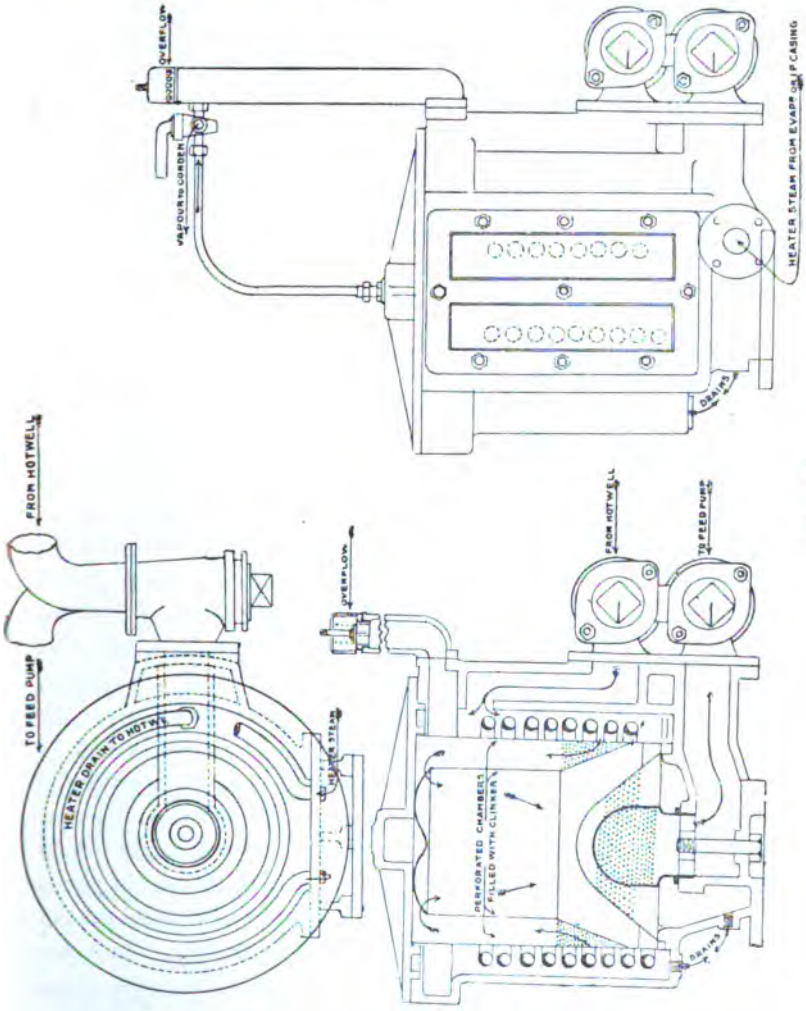

Fig. 23.

catch it was just where it left the cylinders and before it did harm in the condenser. The loss of vacuum caused by greasy

Mr W. Crockatt.

tubes, and the expense and delay incurred by periodically drawing them to free them from grease, was well known to all who had had charge of surface condensing engines. The arrangement illustrated by Fig. 22 had been devised to separate the grease, as well as any dirt, which might pass through the cylinders with the steam into the exhaust-pipe, before entering the condenser. The spiral vanes, A, in the conical enlargement of the exhaust-pipe gave a centrifugal motion to the steam, by which the particles of oil and dirt were thrown against the sides of the pipe, and fell into the collector, B. From this they were drained into the filter, C, which retained all extraneous matter, and passed any condensed steam into the condenser in a pure condition. The vacuum in the condenser kept a constant suction through the filter, so that the grease in the collector could not accumulate and overflow. The base of the cone in the exhaust-pipe was larger than the pipe leading to the condenser, and when the engines were running "slow," or stopped, any oil on the cone or spirals did not go into the condenser, but into the collector. The exhaust steam from the steering and other auxiliary engines might be led into the exhaust-pipe above the separator, and the large amount of grease which such engines carried to the condenser and boilers would thereby be kept out. Any description of filter might be used with this separator. What had been actually used was simply a wire cage, over which a woven hood was drawn; the water passed from the outer to the inner side of the cage. The filter shown in Fig. 23 was fitted to the suction side of the feed-pumps; and a considerable number of this type was already in use. As it was somewhat different from any Mr Shute had noticed, a word of description might not be out of place. It was charged with broken clinker or coke in pieces of about the size of beans. The cylindrical case which contained the material was divided into an inner and outer chamber. The water entered the outer part through perforations round the bottom, rose through the filtering medium, passed over the top of the dividing cylinder, down through the filtering medium in the central part, and escaped through the perforated bottom into the suction-pipe.

A rose was fitted over this pipe to prevent any extraneous matter falling into the suction while the filter was being cleaned. The case which contained the coke or clinker was held down by the cover, and was lifted out bodily when it required to be recharged. The long distance through the filtering medium which the water had to pass, in this arrangement, allowed the filter to be kept of moderate dimensions. The copper pipes shown round the filter case, which was frequently adopted with this filter, formed a feed-heater. The separator in the exhaust-pipe had been in practical use for over four years in the s.s. "Baron Huntly," which ran between Glasgow, Lisbon, and Huelva. The only oil used for the cylinders in that vessel was practically that for swabbing the rods, yet at the end of the ten or eleven steaming days in each voyage, a few handfuls of dirty grease was taken from the outer part of the filter, and the hood over the cage was found to be saturated with grease. No soda or other detergent had ever been used to clean the condenser tubes, nor had they been drawn, yet the vacuum could be easily maintained as high as on the vessel's trial trip. The boilers had been examined regularly, but no trace of grease had ever been detected. The indicator diagrams showed that no back pressure was caused by the vanes in the exhaust-pipe. That method of separating the oil, etc., had obvious advantages over the feed-water filter. It kept the condenser tubes as well as the boilers clean, and it kept air- and feed-pump valves free from grease. Owing to the small amount of water which passed through the filter connected with the separator, the filter would run a much longer time without changing and therefore required very little attention.

Mr James Syme (Member)—The s.s. "Propontis" was re-engined by Messrs Randolph & Elder in 1874, and at that time there was obtained for the filters two bags of "No. 3 Animal Charcoal," together weighing 5 cwts., and 2 cwts. of unburned Irish lime. On looking through the books of the firm he noticed another interesting fact; viz., the acquirement of "Hydro-carbon oil" from Messrs W. B. Dick & Co., for use in the cylinders.

Mr E. Odagiri.

Mr E. ODAGIRI (Member)—Seven or eight years ago the Japanese Naval Authorities began to earnestly consider the question of filtering the condensed water before it again reached the boilers. Loofah, a material extensively used for domestic purposes, was finally adopted as a filtering medium, and was now employed on board the majority of Japanese war vessels. It was a light, fibrous substance, and was not expensive in Japan. It was also compact, and could be easily manipulated, on which point it was far better than animal charcoal. The loofah was packed moderately thick, from 2 to 3 inches, on top of the feed-tank, where the delivery-pipe of the air-pump was led. As far as he knew that was a good position for a filter of that kind, as there was no special arrangement required. Moreover, the loofah could easily be removed and washed during long voyages without interfering with the working of the main engine. He had served on board two or three vessels on which loofah was used as a filtering medium. After steaming for a fortnight, or a little more, it was taken out and treated with washing soda for the purpose of freeing it from oily matters, extracting dirt, etc., and it was again put into position. During the war between Japan and China loofah was generally used on board the large cruisers, and it gave great satisfaction in the engineers' department.

Mr WILLIAM RIGG (Associate)—Mr Shute had considered his subject solely in its relation to Marine practice. It would not have been out of place had he taken some notice of the circumstance that, Marine engineers differed considerably in their views as to the use of oil as a piston lubricant. There were many well known engineers of eminent standing who discouraged the use of oil, preferring to rely on the moisture due to condensation of the steam within the cylinder as a lubricant. Recently he had occasion to be on board one of the largest steamers in the China trade, and was told by one of the staff that the chief engineer was of that opinon, and that they did not consume more than 3 gallons of oil on the run from Singapore to Glasgow Harbour. Their boilers were consequently, practically speaking, always clean. Assuming

Mr William Rigg.

that to be correct, the question arose: Was it therefore necessary to use the feed-water filters at all in this up-to-date practice? Mr Crockatt had called attention to an arrangement intended to extract the oil from the exhaust steam on its way from the low-pressure cylinder to the condenser. It did not matter where the oil was arrested provided it was kept out of the boilers. In support of that he took the liberty of giving the following case:—About ten years ago a factory owner went in for the use of high pressure steam generated in water-tube boilers, which served a triple-expansion engine plant. Just twelve months after the start the tubes in the boilers were found to be badly burned, especially those nearest the fire; and to remedy the evil, a method of arresting the

Fig. 24.

oil between the condenser and the hot-well was introduced. Since then no tubes had been burned, and the point he wished to draw attention to was that, about three weeks after the introduction of the method, flakes of grease began to appear among the black oil-extracted from the feed-water, showing by their curved formation that they had been carried by the water of condensation from the condenser tubes. It should be noted that at least 60 or 70 per cent. of the engines employed on land were built on the horizontal principle, and therefore lubrication by the moisture of steam was impracticable, consequently oil as a lubricant was invariably used.

Mr William Rigg.

In most cases there were ample supplies of water both for steam generation and for steam condensation, therefore the need for oil-arresting appliances was not much felt; and, except in certain instances, the appliances recommended by Mr Shute were inapplicable, being too costly. There were districts, however, such as Glasgow, Dundee, and other centres, where it was necessary to use methods of arresting oil to obtain the best economy. Recently a firm of manufacturers possessed a 60 H.P. boiler of the Lancashire type and a horizontal engine with single cylinder and jet condenser; the feed-water was pumped into the boiler from the hot-well, because of scarcity of water. As difficulties were experienced due to oil coating the heating surfaces, especially over the furnace crowns, he advised the use of a "MacDougall Oil Separator" (Fig. 24). The apparatus was placed between the feed-pump and a "Green's Economiser," and there suitably connected to the feed-pipe. The result was that the boiler, which carried a pressure of 50 lbs. per square inch, began to show, about five or six weeks after the apparatus was installed, considerable leakage around the furnace front, especially from the rivet heads holding the furnace ring to the front, and to the furnace tube. The leakage became so considerable that the firm got alarmed and wished to have the appliance removed. He explained that the trouble complained of was due to the fact that there had been little oil passing into the boiler since the application of the separator, and the already existing oil coating on the heating surface and round the rivet heads (which were not tight) was wearing off, and that these particular joints and rivets should be dealt with by a boiler-maker. That was done and the trouble ended. The oil found between the fillet arrangement, provided in the apparatus for filtering purposes, was in a glutinous condition, thick, black, and dirty. He had applied this apparatus in some cases on the suction side and sometimes on the delivery side of the pump, with equal effect.

Mr ANTHONY HARRIS—The following particulars with respect to land boilers, and the analyses of water, for which he was indebted to Mr J. Stead, Middlesbrough, might be of interest in the discussion on feed-water filters. The reservoir water which formed the feed-

supply, on being analysed, was found to contain the following elements :—

	Water taken from Reservoir. Per Gallon.	Water taken from Boiler after six weeks working. Per Gallon.
Carbonate of lime, etc. ...	1·40 grs. ...	0·98 grs.
Sulphate of lime	3·40 „ ...	38·93 „
Sulphate of magnesia ...	5·04 „ ...	0·90 „
Sulphate of soda	6·93 „ ...	586·70 „
Sodium chloride	3·97 „ ...	128·72 „
	20·74 „ ...	756·23 „

After six weeks steaming, an analysis of the boiler water was taken. The engines were not surface condensing, and as part of the steam was used in heating dyes and not returned to the boiler, the impurities contained in the feed-water accumulated, and became concentrated. A comparison of the following analyses of the boiler deposits with those already given enabled one to trace, to a certain extent, what became of the original impurities contained in the feed-water :—

	Hard Scale.		Soft Deposit.	
Lime	35·90%	Essentially as sulphate.	20·50%	Essentially as carbonate.
Magnesia	8·68%	...	33·19%	As carbonate and hydrate of magnesia.
Alumina	0·30%	...	0·50%	
Peroxide of iron ...	0·90%	...	0·80%	
Silica	5·40%	...	7·80%	
Sulphuric acid ...	32·69%	...	2·23%	
Carbonic acid, Combined water, Carbonaceous matter ...	16·05%	...	34·70%	
	99·92%	...	99·72%	

The fluctuations in the above analyses of water taken from the reservoir and from the boilers after six weeks working were remarkable. They were partly accounted for by the varying propensity to precipitation which the various ingredients were subject to when heated

Mr Anthony Harris.

above the boiling point, and therefore the hard scale and soft deposit resulting therefrom, viewed in connection with what remained in boiler water, were of interest. The carbonates of lime and magnesia which had so largely disappeared in the boiler water reappeared as such in the soft deposit. The sulphates of lime and magnesia reappeared as magnesia and sulphate of lime in the hard deposit, and as carbonate and hydrate in the soft deposit—the sulphate of lime to an astonishing extent. The sulphate of soda and sodium-chloride remained in the concentrated boiler water, the ratio of concentration being respectively 84·6 times and 32·4 times the amount in the feed. Now, why did these rates of concentration vary when they were not accounted for in the hard and soft deposits? The total concentration of the whole impurities in the boiler water worked out at an average of 36·4 times, but the number of times the whole contents of the boiler had been evaporated was 135·5. Looking for a moment at the total amount of impurities; the feed from the reservoir contained 20·74 grains per gallon. The quantity of water evaporated by that boiler was given as 730 gallons per hour, or during the six weeks 630,720 gallons, which, multiplied by the grains per gallon, made the total impurities 1868·73 lbs. The concentrated water contained 496 lbs., leaving 1372·73 to be accounted for in the scale and soft deposit. Of this, when it was collected and put together, there could not have been more than ·2 cwts., so that 1148 lbs. was unaccounted for, and that seemed to have passed off with the steam in finely divided particles. In this he was confirmed by the fact that one of the troubles at those works was, that some matter passing over with the steam affected the colours of the dyes in the vats, which were heated with steam from the range of boilers, of which this was one; and it was noticeable that wherever there was a leaky steam-pipe joint everything in the neighbourhood was whitened. That being against accepted opinion as to impurities passing off in such large quantities with steam, especially with such highly soluble substances, it seemed wise to test it by an analysis of the steam itself, and that was done at a subsequent date. As it might have been

Mr Anthony Harris.

put forward that the impurities were carried over by priming of the boilers, care was taken to procure the steam for analysis from the furthest point possible from the main stop-valve, and it was therefore taken from a cock high up in the steam space of the boiler end plate. The steam was condensed in a coil immersed in water, and on analysis it was found to contain impurities to the extent of 10 grains per gallon, the whole being soluble solids. The boiler it was taken from was another of the same range of boilers as that which had been blown down, but had not been so long at work. The analysis of its water showed that the concentrated impurities only amounted to 331 grains per gallon; but, it seemed worthy of notice that, while the total impurity passing in with the feed was (provided that the feed from the reservoir contained the same amount of impurity as on the previous occasion) 20·74 grains per gallon, 10 grains were passing with the steam from the concentrated water. However, as there had been a heavy rainfall during the latter experiment, while in the former a dry season had prevailed, there would probably be a difference in the amount of impurity in the reservoir water. The concentration of impurities in the boiler running six weeks, up to 756 grains per gallon, was by no means excessive. At one of the large Government factories there was a battery of boilers which was blown out every fortnight, by which time the impurities reached as high as 1,500 grains per gallon. In both of those cases the greater part of the impurities, which were deposited on the surfaces, might have been suppressed by treatment of the water before it entered the boilers. It was interesting to note the varying facilities the different ingredients appeared to have for passing over with the steam. The advantages of filtration were not confined to the removal of the impurities of the feed in the ordinary acceptation of the term. For instance, in the case of a feed-pump bucket, or chamber cutting, or even through a gland screwed down slightly to one side, the particles were carried straight into the boiler unless there was a filter to arrest them, and in five minutes, mischief might be caused sufficient to ruin the finest and most carefully made boiler in existence. He believed the time

Mr Anthony Harris.

would come when filters would be fitted between all pumps and the boilers, no matter how pure, apparently, the feed-water appeared to be, whether surface condensing or fed direct from a pure source.

Discussion.

The discussion on this paper took place on 20th December, 1898.

Mr F. J. ROWAN (Member) said the communications read by the Secretary from Mr Syme and Mr Nisbet Sinclair, had to some extent forestalled some remarks which he had intended to make on the historical part of Mr Shute's paper. Those communications bore witness that a feed-water filter formed part of the equipment of the S.S. "Propontis" in 1874, although Mr Shute gave 1884 as the probable date of the first introduction of filters on board steamships. Mr Sinclair's remarks, however, left it to be inferred that the introduction of the filter in the "Propontis" was the first instance of its use, and was due to Mr Kirk, but that was a mistake. In October, 1874, he (Mr Rowan) addressed a letter to the Editor of "Engineering" (which was published in that paper at that date) on the subject of corrosion in boilers, in which letter the following observations occurred:—"Corrosion of the boilers was one of the principal causes of the failure of the early examples of the compound engines and boilers on Rowan and Horton's plan, commencing with the S.S. "Thetis" in 1858, whose boilers suffered from this action after a few years' work. This naturally led to much attention being devoted to this subject, and as these boilers were of the sectional or water-tube class, working at a steam pressure of 120 lbs. per square inch, and using nothing but fresh water supplied by condensation when at sea, they offered oppportunities for the observation of all the corrosive forces acting in circumstances the most favourable for them. When I tell you that six sets of these marine boilers worked for from eight to ten years at their original pressure of 120 lbs. per square inch without repairs being necessary, you will readily understand that means were at length adopted which practically overcame in these boilers the corrosive action which had proved so disastrous in many of their predecessors and

contemporaries. The means used for the preservation of the boilers were simple. First, all the water discharged by the air-pump was passed through a filter—a chamber in the feed-tank filled with sand or charcoal—and this arrested all grease and all metallic particles on their way from the engines to the boilers. Then, pieces of zinc were inserted at various parts of the boilers, and as acids have a greater affinity for zinc than for iron, the fatty acids expended their energy in the formation of salts of zinc, and the iron escaped, whilst the zinc plates corroded away. I believe these precautions were accompanied by the occasional use of lime, a little of which was put into the feed-tank, but this was not of great importance in the case of these boilers, as they had an opportunity of replenishing their supply of fresh water pretty frequently in port, their voyage not being of long duration. Lately I had an opportunity, during a voyage of the S.S. "Propontis" which is fitted with our boilers working at 150 lbs. pressure per square inch, of observing the working of these plans, which in her case are continuing to act satisfactorily. In the "Propontis" pieces of limestone along with the zinc were put into all the chambers of the boilers containing water, but on the suggestion of Mr A. C. Kirk we have discontinued using the limestone in those chambers immediately over the fires. . . . . The filter in her case is filled with the ordinary bone charcoal used in sugar-refining, and the evidences of grease and particles of metal (brass and copper) arrested by it have been abundant. I have examined frequently the black grease taken from the exterior of the filter and found it full of small metallic particles." The facts recorded in that letter carried the introduction of feed-filters on board ship back to about 1862. In those early days the filter was merely a compartment in the feed-tank, because, instead of the admission of air being considered deleterious, many engineers (including Mr Kirk) advised that all the distilled water (*i.e.* the water resulting from the steam condensed in the surface condensers) should be aerated, as it was supposed that repeated boiling gave the water some corrosive qualities. It was not until 1876 that he (Mr Rowan) first pointed out that the air

Mr F. J. Rowan.

(or oxygen and carbonic acid) held in suspension by, or dissolved in, water was the principal agent in the corrosion in boilers, and probably the interesting forms of filters illustrated by Mr Shute were the outcome of those early ideas, developed on the lines of the careful exclusion of all matters likely to injure the boilers. While he appreciated the interesting and useful character of Mr Shute's paper, he was afraid that there was some little confusion in the part dealing with the chemistry of corrosion, and in the references to Prof. Lewes' paper. In the extract from Prof. Lewes' paper, quoted by Mr Shute, the presence of some solid matter, such as calcic sulphate or something else, in the water was necessary for the action described, by which a deposit of oil could take place on the boiler surfaces. But if evaporators were used on board ship, and precipitators (such as Prof. Lewes himself proposed) were employed for water containing salts of lime or magnesia, along with filters, it was hard to see how such solids could be there. Mr Shute applied Prof. Lewes' description to the deposit of fatty acids, but in the case dealt with in Prof. Lewes' paper there was nothing used but valvoline, a pure mineral oil lubricant, which necessarily contained no fatty acid, being almost pure hydrocarbon. Further down Mr Shute spoke of fatty acids "entering into solution with the water," but both oleic and stearic acids were insoluble in water, so that such action as he referred to could not take place. Besides, if fatty acids could be *dissolved* in water, then the action described by Prof. Lewes could not take place in their case. If nothing but mineral oil were used for the engines, no grease or fatty acids could reach the boiler. The temperature of the boiler—especially where high pressures were used, as at present—must not be forgotten, and this had a great influence on the question of the proper position for the filter. All the fatty acids, and many of the hydrocarbons, were readily volatilised, and existed as vapour at such temperatures as belonged to the pressures in use. Even valvoline, which did not fully volatilise till 371° Cent. or 699° Fah., had been found by Prof. Lewes to pass over with steam in a semi-volatilised condition—making the steam greasy, as he termed it—

at 120° Cent. or 248° Fah.; a temperature corresponding to a pressure of under 30 lbs. per square inch. That was very much lower than the pressures in use, and hence the difficulty of having efficient filters on the boiler side of the feed-pump and feed-heater. It was difficult to see how a filter placed where suggested in Mr Crockatt's drawing (Fig. 22) could efficiently arrest oily matter, as in presence of uncondensed steam, oil would pass along with the steam. The filter should be beyond the condenser, where it could deal with the substances other than water, which were carried by the water. There were other substances besides grease or oil to be considered, and perhaps Mr Shute had confined his view too exclusively to the latter, because many land boilers had to use natural waters containing muddy particles, besides minerals, which should be precipitated and removed by filtration.

Mr JAMES MOLLISON (Member) said he was always pleased to see some means adopted whereby oil or greasy matter might be arrested, on its passage from the cylinders, before reaching the boilers, where it might become deposited on the furnaces or other surfaces exposed to flame, and cause damage through buckling or collapse. A number of cases of collapse had come under his notice.

Mr SINCLAIR COUPER (Member) observed that Mr Shute referred to two actions of oils on the internal surfaces of a boiler. There were oils which became decomposed by heat, and the acids thus produced acted corrosively on the materials of the boiler; and there were other oils which were not decomposed by heat, but which might settle down on the heating surface and create intense overheating, leading to collapse of the furnaces. If any method could be adopted whereby these various oils or greasy substances could be prevented from entering the boiler, it ought to be welcomed by all engineers. He supposed that there was no up-to-date specification for steam-ship machinery in which feed-water filters were not now specified, and it was interesting to note that even in land installations they were now recognised as useful adjuncts. He thought it was an important point to observe that,

Mr Sinclair Couper.
feed-water filters should not be placed either where there was a high temperature or great pressure, because the oils instead of remaining in a glutinous form became more fluid and were more easily forced through the meshes of the filtering medium, so that the filter became to a great extent of little value. He thought that now-a-days every one was paying more attention to the treatment which boilers should get; formerly, they were allowed to become receptacles for everything that might find a way into them, and little consideration was given to whether they suffered or not thereby. Every means that was introduced to procure clean water, should be welcomed.

Mr JOHN THOM (Member) considered that when ships were properly fitted with filters a great many other conveniences, which Mr Shute might have mentioned in his paper, were brought about through them. Whenever he was able to do so he fitted a filter and evaporator; there was then no necessity for surface or bottom blow-off cocks on the ship or on the boilers. Mr Shute considered that "in an up-to-date steamer a feed-heater was a necessity." He had lately been on board some steamers of recent construction, simply to witness their arrangements, and he thought that the owners would have been very much upset if they had been told their steamers were not up to date. Anything like a feed-heater was entirely absent, but it was possible to heat the feed-water to 200° Fah. and have the ship running as economically as with a feed-heater. He had examined Mr Crockatt's very ingenious filter arrangement on board a steamer, and on putting his hand into the main exhaust-pipe found it quite clean on the inside, although the outside was covered with oil and grease. One drawback, however, was the absence of power to force the water through the filter; in fact, where the filter was placed there was only the height of water from B to C. If he had to fit such a filter he would place it near the bottom and take a greater height of water. If Mr Crockatt could overcome that difficulty he thought the filter would be well worth adopting.

Mr JAMES WEIR (Member) said he knew from experience that

feed-water filters were always of great service, and in many instances a necessity; but he was afraid some engineers were still under the impression that a feed-filter acted in a different manner from an ordinary water filter. The ordinary water filter stopped the solid matter and allowed the water to pass through it, and the feed-water filter stopped the oil and allowed the water to pass. Some years ago he made investigations and found that water dissolved oils to some extent, and that the quantity of oil which passed through the engine was so infinitesimally small, compared with the quantity of water, that the water was capable of carrying all the oil in solution. If there were nothing but oil in the feed-water, the filtering material would simply stop as much oil as the feed-water could not wash out of it. But the feed-water of a surface-condensing engine contained many finely divided solids, such as iron, copper, and other substances which constituted the *dirt*. Oil had a great affinity for this dirt and stuck to it. The feed-water filter now dealt with this undesirable mixture and kept it out of boilers, allowing nothing but clean water with a little oil in solution to pass into them. As far as his observations and experience went, he had never found any bad effects from the presence of a little oil, except when it was associated with dirt of some sort. Regarding the best position to place the filter, that depended on circumstances, but he was certain that the worst place was on the suction-pipe to the feed-pumps.

Professor W. H. Watkinson (Member) remarked that another method of getting rid of the oil from feed-water had been tried, which might be of interest to mention; viz., by means of a centrifugal separator somewhat similar to a cream separator. That method was probably too expensive for ordinary purposes, on account of the large quantity of water to be dealt with, moreover, it could never take out the whole of the oil, as a portion of it formed an emulsion with the water.

The discussion on this paper was resumed on 24th January, 1899.

Mr Robert T. Napier (Member) said that Mr Nisbet Sinclair, in his interesting communication and in his paper in *Cassier's*

Mr Robert T. Napier.

Magazine, introduced the matter of speed of flow through the filter. The only example in the paper under discussion which permitted of calculation on that point, was that of the filter with 18,000 square inches of surface, designed for engines of 7000 I.H.P.; and, on the assumption of 14 lbs. of feed-water per I.H P. per hour, the speed of flow worked out to about 2½ inches per minute. That seemed small compared with some speeds given by Mr Sinclair—up to 14 feet per minute in one case—but, on the other hand, it was greatly in excess of the speed possible when filtering water for domestic supply. The wide diversity of practice in the matter of speed of flow, coupled with the fairly uniform success that attended most of the filters in the market, pointed to the fact that, a very moderate amount of purification of the feed-water was sufficient for ordinary marine boilers.

Mr A. E. SHUTE, in reply, said that some of Mr Nisbet Sinclair's questions, propounded when compiling his "*Cassier*" paper, were perhaps not answered very fully; he would, therefore, endeavour to add something to the information then received. With regard to the first question, he was not aware that any analyses had been made of the feed-water after passing the filter, but rough tests had shown that when the filter had been properly attended to, no oil could be traced in the feed. Analyses taken of the water from the boiler were very misleading, unless they were made in conjunction with analyses of the boiler deposits. As to question 4, filter-cloths did not require to be changed very often in a filter where the area of medium was properly apportioned, and where an efficient means of cleaning, without opening up, was provided. Instances could be given of filters which had run for three months with one set of cloths, and, when removed, they were found to be quite good, although very dirty, in spite of the fact that the filter had been sludged out at least once per day. Concerning question 7, he believed the pressure filter fitted between the first feed-pump and the heater gave the best results, and was more under command than when fitted elsewhere. He had, however, had actual experience with filters placed between the second feed-pump and the boiler, and the

results obtained were very satisfactory, notwithstanding the fact that the filters were under full boiler pressure. When fitted in that position, considerable care had to be taken that the area of medium was large enough to prevent sudden increases in resistance by the deposition of dirt, otherwise there was a risk of the whole, both medium and dirt, being driven into the boiler. This had actually taken place in more than one instance. The aluminium grids used by Mr Harris had, so far, proved satisfactory. Many experiments were made before the right alloy was found. Generally speaking, no complaints had been made regarding corrosion in filters. He was afraid Mr Sinclair's ideas regarding a common basis for determining the area of filtering medium were impossible of attainment. No two engineers thought alike on the subject; one considered $\frac{1}{2}$ sq. inch per I.H.P. sufficient, while another would not be content with less than $1\frac{1}{4}$ sq. inches per I.H.P. Inquiry had been made as to the results obtained in the working of the filter, illustrated in Fig. 1; but, strange to say, nothing was known about it beyond the fact that it was repeated in another job some time after. Evidently, it must have been deemed a success. Mr Crockatt's arrangement was novel in its application. In course of time, however, the condenser tubes would become coated with grease, as the extractor could not take it all up. The efficiency of the filter attached to this arrangement was necessarily impaired by making it a heater as well. Filters should be worked at as low a temperature as possible. Mr Syme's communication showed that the value of a pure mineral oil was recognised long before its use became compulsory. If steam users of to-day would take the same care in providing themselves with a really good and suitable oil for use in steam cylinders, as was evidently taken in the case mentioned by Mr Syme, a good deal of trouble would be avoided. Mr Rowan misunderstood the writer's meaning in regard to the date, 1884. It was merely suggested that filters became known to the writer at that time. He purposely avoided the chronological aspect, in order to avoid getting into difficulties with dates and sequences. Oxygen and carbonic acid caused some of the corrosion in boilers, but

Mr A. E. Shute.

by far the most was due to particles of copper, brass, the acids formed by these metals, or fatty acids. Seeing that he recommended the use of pure mineral oils to do away with fatty acids, he did not see how Mr Rowan could infer that he said fatty acids had their source in mineral oil. Calcic sulphate was one of the commonest substances to be found in boilers, as nine out of ten of the sources of water supply here and abroad contained it. Even supposing no calcic sulphate existed, there was always plenty of dirt, which, when put into circulation in a boiler, would act in the way as described by Prof. Lewis. If fatty acids were so easily vaporised, as Mr Rowan said they were: How did it happen that they were actually found at work in all parts of a boiler? If mineral oil, too, were so volatile, it would not be found spread over the entire surface of the interior of a boiler—tubes, stays, fire-boxes, and, to a minor extent, the furnaces, all being covered evenly with the deposit. Not long ago he examined some boilers and found them as described, and, on samples of the deposits being submitted to Mr J. Bradburn Dodds for analysis, they were found to contain the following matters:—

	No. 1.		No. 2.
Cupric oxide, ...	4·37	... ...	2·50
Ferrous „	7·31	... ...	4·30
Calcic „	5·14	... ...	0·94
Magnesic „	7·90	... ...	4·50
Zinc „	6·25	(and metallic zinc)	51·20
Calcic sulphate, ...	7·36	... ...	3·11
Oily matter in chemical combination with above oxides,	32·67	... ...	6·00
Free oil mechanically mixed through deposit,	28·30	... ...	27·50
Total,	99·30	Total	100·05

In column No. 1, the deposit was taken from around the tubes well down in the boiler, and, in No. 2, from the boiler bottom. The oil was also analysed, and was found to be a purely mineral one. These analyses surely proved that Prof. Lewis was correct. He confessed that an error had been made in stating that fatty acids entered into solution with the feed-water. What he had intended to say was that the animal and vegetable oils or fats entered into solution with

the feed, and were converted into fatty acids in the boiler. Mr Couper caught the meaning intended to be conveyed, and he was glad to hear him emphasise the statement made regarding temperature. As to the pressure, filtration could be carried on at 200 lbs. pressure as well as at 20 lbs., if only the proper precautions were taken. Mr Weir had described in a very few words the position with regard to dirt and oil. If the "little oil" could be had without the dirt, or *vice versa*, things would go well for a time, but it was the two together which caused the trouble. The "loofah" mentioned by Mr E. Odagiri appeared to be a very useful material, and should command some attention from filter-makers. If the subject had been treated as Mr Rigg suggested, it might, he was afraid, have proved an interminable one. The conditions were so different on shore to those afloat that the shore filter really demanded separate treatment. If three gallons of oil were used in the case mentioned by Mr Rigg: Where did the oil disappear? The answer to this was a very simple one. If Mr Rigg had gathered the apparently dry powder to be found deposited in the boiler, and submitted it to analysis, he would easily have detected marked traces of oil. There were ships making the same voyage as the one mentioned by Mr Rigg, fitted with filters, and using about the same quantity of oil, but it was trapped in the filters, as actual results had shown. The fact that grease had such an affinity for grease was the reason why the conditions of the filtration of feed-water were different to those in domestic water supply filters. The wide diversity of practice referred to by Mr Napier was really the fault of the engineer. The filter mentioned by him was designed to fulfil certain conditions; viz., to run the maximum length of time with the minimum of resistance and attention. Mr Harris' remarks were so interesting, and opened up such a new line of argument, that it was impossible to go into them in detail. He could corroborate the statement as to steam carrying over some of the solids introduced into the boiler with the feed supply.

On the motion of the PRESIDENT, a vote of thanks was awarded Mr Shute for his paper.

METERS AND SYSTEMS OF CHARGING FOR ELECTRIC ENERGY.

By Mr WILLIAM ARNOT (Member).

(SEE PLATES VI. AND VII.)

Read 22nd November, 1898.

To the public generally, the cost and mode of charging for any commodity is the main point. The machinery used in generating electricity, and the means adopted for its distribution, may be costly and complex, and the different systems may occasion wrangles and discussions among engineers; yet these things are as nothing to the public compared with the correctness of the meter, and the reasonableness of the charge.

To the engineer, there is no greater source of worry and annoyance than the meter; upon it, all the disputes between supply and consumption arise and hang, and by it all have to be settled. It will, therefore, be easily seen that, of all the plant and mechanism required for the proper supply of electric energy, or in fact energy from any source, no part is more important than the meter.

The work of a supply meter is to measure the different and ever changing quantities in demand by the consumer, and is expressed in Board of Trade Units. This unit of energy has been so called, for want of a better name; an attempt was made some years ago to call it a "Kelvin," but it was not successful, and until some unlooked for event happens, or some leading scientist dies, when his name may be appropriated, the unit will continue to be called a Board of Trade Unit.

A Board of Trade Unit is the integration of C V dt.

When C is current in Amperes; V, pressure in Volts; and dt, a small difference of time in hours.

One Board of Trade Unit $= \int_{t_1}^{t_2} \mathrm{C\,V}\,dt = 1000.$

In general practice, as from a central supply station, when the pressure is a constant factor, while the record is expressed in Board of Trade Units, the duty of the meter is simply $\int_{t_1}^{t_2} C\, dt$, that is, it integrates the varying currents, and the time during which these different currents extend; such an instrument is called a Coulomb meter. A meter, however, whose function is to find the value of $\int_{t_1}^{t_2} C\, V\, dt$, is called an energy meter, and the means used to accomplish this measurement are very varied. In examining the different meters, one can arrange them in four classes:—

1. Electrolytic Meters.
2. Motor ,,
3. Clockwork ,,
4. Intermittent ,,

Edison Meter.—In the first class we have pre-eminently Edison's meter. The original meter, shown in the Paris Exhibition of 1881, was composed of two cells, each containing a copper plate, and into which were hung copper plates in a solution of copper sulphate. These latter plates were suspended from each end of a balanced beam. When the current was in one direction, its action was to increase one suspended plate and lighten the other, until the beam tipped over and registered one unit. When the beam tipped, it not only registered but also changed the direction of the current, thus causing the reverse action to take place, the heavier plate was partly dissolved and the lighter increased in weight. This action went on continually. Though there is no more accurate measurement of current than the deposition of copper by electrolysis, yet this meter was soon abandoned. As only a portion of the current used passed through the meter, the continual changes of resistance, due to temperature, made it inaccurate, and the constant reversal of the current was detrimental. Edison's second meter was also electrolytic. In it zinc plates immersed in a zinc sulphate were used, and the energy passed through the meter was ascertained by taking out the plates and weighing them, the increase of weight being proportional to

the current and time, the pressure being assumed. A very vital objection to this meter is the certainty of a large crop of complaints, seeing that the plates have to be taken out and weighed; no mechanical registration being possible.

Lowrie Hall Meter.—There is also the Lowrie Hall meter for alternating currents, which also depends on the difference of weight in the plate to determine the quantity consumed, and over twenty patents have been taken out for electrolytic meters, in which the plates are either weighed from time to time, or the measure of the gas liberated is proportional to energy consumed.

Bastian Meter.—Of the latter, perhaps the most interesting is the meter lately brought forward by Mr Bastian. This meter is particularly applicable to the measurement of small currents. It depends entirely on the electrolysis of water. At the foot of a long tube, filled with water, are placed two platinum plates, and as the current passes between these plates, a certain amount of gas proportional to the current is liberated and escapes. Alongside the tube is a scale graduated in Board of Trade Units with the zero at the top, the meter is filled up to zero, and a thin layer of oil is placed on the top to prevent evaporation. As the gases escape, due to the electrolytic action of the current, the level of the water gradually falls, and the scale, which indicates the quantity used, is read like a thermometer, at the level of the water. The two principal advantages of this meter are, low cost, and capability of indicating very small currents, such as one lamp at a high voltage. It has not been tried for any length of time, and it therefore remains to be seen whether the electrodes or platinum plates within the water will stand, and whether the refilling of the water-tubes will not entail much expense and attention, also whether the oil floating on the top of the water will not occasion trouble by coating the inside of the tube as the water falls. A small amount of sulphuric acid is put into the water to keep it from freezing.

Ferranti Meter.—Of all motor meters, perhaps Mr Ferranti's deserves first attention. Not only is it in very extensive use at the present day, but it is one of the oldest meters, Mr Ferranti having

begun his first experiments in connection with it as far back as 1883. It is a Coulomb meter, and has been much more successful for direct currents than for alternating currents. The construction of this meter is exceedingly simple. It consists of an insulated mercury bath placed between the poles of an electro-magnet; the current to be measured passes through the main coil, thus energising the magnet, then through the mercury bath, entering at the centre and leaving at the periphery, and in so doing the mercury revolves. In this connection, Mr Ferranti says; "In order to get the rotation of the mercury proportional to the amount of current passed, a satisfactory retardation has to be provided for the mercury, otherwise it would run away and give an incorrect registration. To accomplish this, the insulation covering the pole-pieces and forming the mercury bath is serrated with a row of radial grooves, which gives the necessary retardation to obtain proportionality of rotation." Within the mercury bath, for the purpose of conveying the motion of the mercury to the recording dials, a fan is partly immersed in the mercury. This fan is so constructed as to record accurately the rotation of the mercury, and yet offers very little attraction to the side of the bath. It consists of two blades of aluminium and two blades of platinum. Great care has to be used in the weights of the fan and the spindle, so that no weight is on the jewel, on which it rests, when the meter is at work. The calibration of the meter is carried out on the back dials; to calibrate on the front dials not only means time, but also a considerable amount of current. It is, therefore, much easier and cheaper to count the rotation of the fan spindle, which, with all currents, should be proportional to the amount passing, to within 2 per cent.

Hookham Meter.—The Hookham meter is also a Coulomb meter, and while, to some extent, resembling Ferranti's meter, it differs from it in many points. The armature in Ferranti's meter is a bath of mercury which revolves between the poles of an electro-magnet; Hookham's has a copper armature revolving underneath the pole pieces of a permanent steel magnet. To guide the lines of force through the armature, an iron bridge piece is placed underneath the

armature, which compels the lines of force to pass from one end of the magnet, down through the armature, across the iron bridge, and up through the armature to the other pole piece of the permanent magnet. The cavity in which the armature is placed is filled with mercury, for the purpose of conducting the current from one conductor to the other, across the armature. The two conductors are led into the mercury bath at either side of the meter. That the revolutions of the meter may be proportional to the power, a brake-disc is fitted on the same spindle as the armature. This disc consists of a thin circular copper plate, which revolves between pole pieces attached to the main permanent magnet, the eddy currents in the copper plate acting as a brake. These eddy currents, or as they are sometimes called Foucault currents, are exactly proportional to the speed, and thus the retardation is proportional to the speed, seeing the eddy currents are multiplied by the field which is constant, therefore the revolutions of the armature are a true indication of the power. As in the Ferranti meter, the revolutions of the armature are conveyed to the recording dial by means of a worm gear on the end of the armature spindle.

Elihu Thomson Meter.—Another meter that has been extensively used in America is the Elihu Thomson meter. This meter is an energy meter, that is to say, as I pointed out at the first, it takes notice of the pressure. The field in which the armature revolves consists of two coils of thick wire, which carries the main current; these are either connected in series, as in the case of a two-wire distribution, or they may be connected up separately, one on either side of a three-wire distribution. The armature consists of very fine wire, wound on the drum principle, and mounted on a vertical spindle, the current in the armature being due to the pressure across the mains. On the same spindle, underneath the armature, and revolving between permanent magnets, is a copper disc, which acts as brake-disc similar to that described in the Hookham meter. The current is conveyed to the armature by means of a silver commutator and brushes, with silver contact pieces. To my mind, this is its weak point, as constant attention is required to keep the

commutator clean and free from sparking; any sparking in the commutator at once upsets the accuracy of the meter. This meter can be used with either direct or alternating currents.

Shallenberger Meter.—This meter is entirely for use with alternating currents. It is a Coulomb meter, the action being very similar to a two-phase motor. Within two coils, whose magnetic axes enclose an angle of about 45 deg., a thin iron disc is mounted on a vertical spindle, the larger and outer of the two coils carries the main current, and induces a current in the smaller coil. The two currents together produce a rotary magnetic field by which the iron disc is revolved. Retarding force is obtained by friction between the air and an aluminium fan attached to the bottom of the spindle. The revolutions of the disc are recorded in the usual way, by a worm and wheel gear on the top of the spindle.

The Perry Meter.—The manufacture of this meter has been stopped by Messrs Chamberlain & Hookham, it being an infringement of their patents. It has many points similar to the Ferranti or the Hookham meter, and has a copper cup revolving in mercury between the poles of a permanent magnet.

Clockwork Meters.—The most important in this class, in fact the only one that has reached to any commercial success, is the Aron meter, which can be either used as a Coulomb or an energy meter, either for direct or alternating currents; but it is chiefly used as a Coulomb meter for direct currents. There are in the mechanism two separate clocks, each with a mainspring, escapement, and pendulum. The pendulum of one clock is fitted in the ordinary way. If the meter is to be used as a Coulomb meter, the other clock pendulum is fitted with a permanent magnet as a bob. Under this magnet there is fixed a coil through which the current to be measured passes, and the clock is retarded in proportion to the current passed through, due to the attractive force between the magnetic field of the current and the pendulum magnet. If the meter is to be used as an energy meter, the pendulum has a coil of fine wire for a bob instead of a magnet, the current in the coil being due to the pressure across the mains; this fine coil swings either over or through the main coil,

and the attraction between the two currents retards the clock. Between the two clocks is fitted a differential gear, so constructed, that when they are in synchronism no record is made, but whenever one clock, through the retardation of the current, goes slower than the other, then the difference in time becomes the quantity of energy consumed, and is registered on the dials in Board of Trade Units. The great disadvantage in such meters is the necessity of winding them up every fortnight or three weeks, but the latest designs of the Aron meter have a self-winding arrangement in the form of a small motor. There is also the difficulty that, if one pendulum stops not only does the record cease, but all previous record is blotted out. This class of meter is peculiarly adapted for battery charging, as current passing in either direction is registered. It is, therefore, only necessary to fit a large dial in place of the four small registering dials, and after the discharge has been taken from the accumulator, the meter is so constructed that, on bringing back the needle to zero, not only has the discharge been replaced, but the necessary percentage for battery loss has been added.

Intermittent Registration Meters.—This class of meter is now only represented by Lord Kelvin's meter. A number of such meters have been invented, perhaps one of the most important being Fragé's meter. The principle is the same in all. The total reading is not the result of continuous registration, but is the integration of small quantities taken at given intervals of time. In some meters, as in Lord Kelvin's old meter, there is a revolving cam upon which is held a small roller, the position of the roller being determined by the current passing through the meter. When the current is large, the roller passes over the wide end of the cam, and when the current is small it passes over the narrow end. In this way, the different currents are integrated. In Lord Kelvin's present meter, the integration is taken from a saturated core of a solenoid, the main current passing round the solenoid. The core is suspended from the top by means of very fine flexible springs, and is drawn into the solenoid in proportion to the current passing round it. Suspended from the foot of the core, is a strong non-

magnetic pointer. When no current is flowing, the pointer does not project beyond its limit, and when the full current is passing the pointer reaches its lowest limit. Once every minute, actuated by clockwork, a lever or foot rises and falls. When the solenoid pointer, by the influence of the current, is projecting to its full extent, it is lifted by this foot, and by means of friction clutches which engage it, it turns the recording dials. The dials are thus moved in accordance with the length of the pointer projecting beyond the core of the solenoid, in proportion to the current flowing. One difficulty with these meters is the clockwork mechanism and its liability to stop; another objection raised by some is the noise. These objections, I think, have been overcome in recent productions. Great care is necessary in testing intermittent meters, as one lift more or less, when the time allowed is short, sometimes means a considerable percentage of error.

These are the principal meters now being used for the measurement of electrical energy. I might have gone further back and given details of many more; but I do not consider that it would in any way advance our purpose to dwell upon instruments now obsolete, some of which were clever and very ingenious but were found to fail on some ground or another. The principal points of failure were:—

Brake power.
Mercury commutators.
Hand-winding.
Slow starting from friction.
Oxidation of the parts.

However perfect the instrument, both in design and workmanship, and however perfect the theory on which it is constructed, it will be a useless meter if not carefully calibrated before being placed in a consumer's house. The calibration of meters is almost entirely in the hands of the Supply Companies and Local Authorities, who are undertakers, and I firmly believe they exercise every care to make their tests exhaustive and complete.

The London County Council eight years ago established a

laboratory in London, for the purpose of calibrating all meters used by Companies within their control. Liverpool and Birmingham also had laboratories of their own, while the supply was in the hands of a Company. I do not know whether Liverpool has continued its laboratory since taking over the supply from the private Company, and I do not know that there is any reason why it should not continue to have its meters calibrated under an Inspector appointed by the Board of Trade, as I think such an inspection is provided for in all provisional orders. I do not profess to be a lawyer, but I am of opinion that a consumer could refuse to pay a disputed account that was not rendered from a meter duly certified by an inspector appointed by the Board of Trade, and I do not think that Local Authorities are exempt from these conditions though they are the undertakers. Of course, at the first it was impossible to appoint inspectors, as no meters were approved by the Board of Trade until quite recently. For direct current only three meters have been approved; the Ferranti and Hookham on 30th October, 1896, and the Aron on 26th July, 1898.

To bear out my contention I will quote from the Provisional Orders:—

Clause 27.—"The Board of Trade on the application of any consumer, or of the undertakers, may from time to time appoint, and keep appointed, one or more competent and impartial person or persons to be electric inspectors under this Order, and from time to time remove any person so appointed."

The duties of an electric inspector under this Order shall be:—

(*b*) "The certifying and examination of meters."

Clause 40.—"The amount of energy supplied by the undertakers to any ordinary consumer under this Order, or the electrical quantity contained in such supply (according to the method by which the undertakers elect to charge), in this Order referred to as 'the value of the supply,' shall, except as otherwise agreed between such consumer and the undertakers, be ascertained by means of an appropriate meter duly certified under the provisions of this Order."

Clause 41.—"A meter shall be considered to be duly certified under the provisions of this Order if it be certified by an electric inspector appointed under this Order to be a correct meter, and to be of some construction and pattern, and to have been fixed, and to have been connected with the service lines in some manner approved of by the Board of Trade; and every such meter is in this Order referred to as a 'certified meter': provided that where any alteration is made in any certified meter, or where any such meter is unfixed or disconnected from the service lines, such meter shall cease to be a certified meter unless and until it be again certified as a certified meter under the provisions of this Order."

Clause 42.—"Every electric inspector on being required to do so by the undertakers or by any consumer, and on payment of the prescribed fee by the party so requiring him, shall examine any meter intended for ascertaining the value of the supply, and shall certify the same as a certified meter if he considers it entitled to be so certified."

Such a system of inspection is already carried out in the Gas Department, with gas meters, and would be an easy solution for all disputes over electric charges.

More important to the public than the construction of the meter, or its certification, is, perhaps, the charge made by the undertakers; and in considering this question of charge many points come up which have to be looked at, before the system, that will give most general satisfaction and yet be remunerative to the Supply Companies of the different districts, can be decided on. It would be an easy matter to fix a price if the supply were taken regularly, within a given number of hours each day, throughout the year; but these conditions do not anywhere exist. Whether it be a demand for light or power, that demand is very variable, depending upon the circumstances without the control of either party. The most favourable conditions we yet know of, for the consumption of electric energy, is the use for power by large engineering works, or a large tramway system, or a factory using electrolysis as a means of manufacture. These have a fairly consecutive load, but

they have their peaks on the curve, though not to the same extent as in lighting.

When electricity is used for lighting purposes the load is as variable as can well be conceived. There is not only a very light load every forenoon, but a specially light load for half the year. During the year the maximum load occurs on one day only and continues for a very short time, not more than half-an-hour, and during the winter months clouds and fogs cause a continual variation on the output. All this has to be met by machinery, which, for the greater part of the year, is standing idle, as is borne out by the fact that the proportion of actual output to the possible is about 10 per cent. To meet all these varied circumstances, a charge has to be made that will be remunerative both to the supplier and the consumer.

Looking at the tabulated costs taken from returns of the different undertakers, it is very difficult to place them on a common basis for comparison, for while one Corporation puts all wages and salaries to maintenance, another divides this sum between revenue and capital account, on the ground that part of the time of their employees is occupied in the erection of new work. The amount set aside for depreciation varies very much, and the cost per unit generated is influenced by the number of public lamps erected in the streets. Taking all these points into consideration, one is unable to make a correct comparison between the different supply undertakings. It is, however, very interesting to compare the costs of two such towns as Edinburgh and Glasgow, Table I., when in Edinburgh there are such a large number of public lamps.

The fuel in Edinburgh is better than the fuel in Glasgow, as Glasgow only burns gas char.

The oil and engine stores are identically the same.

Wages, though practically the same, are a little higher in Glasgow per unit, and being a standing charge are quite independent of the amount of current used. Had Glasgow as many street lamps as Edinburgh the cost per unit would be ·2d, or only ·02d above Edinburgh.

Repairs and maintenance show a greater difference, and I give, Table II., the details on the several items.

TABLE I.

	Glasgow. For Year Ending 31st May, 1898.			Edinburgh. For Year Ending May, 1898.		
	Units Sold.			Units Sold.		
Private Lighting,	...	1,885,902	...	...	1,973,123	
Motor Power,	...	—	...	...	86,654	
Public Lamps,	...	228,134	...	...	834,660	
Total, ...	...	2,114,036	...		2,894,437	
	£ s. d.		Pence per Unit.	£ s. d.		Pence per Unit.
Fuel, ...	3945 15 0		·447	4175 16 1		3·46
Oil & Stores,	514 13 5		·058	676 16 3		·056
Wages, ...	2315 4 3		·262	2181 0 4		·181
Repairs & Mainte.,	4318 16 6		·490	2279 8 11		·190
Rents and Taxes,	2647 19 5		·300	1866 5 11		·154
Management,	3157 19 7		·359	3313 11 4		·274
Depreciation,	8945 1 9		1·190	7686 0 0		·637
Sinking Fund,	1537 0 0		6·35% on Cap.			2·96% on Cap.
Interest on Capital,	4814 3 10		·546	5937 6 7		·492
Surplus, ...	2174 10 6			7024 1 7		
	34,371 4 3			35,140 7 0		
Street Lamps,	1,989 10 7			2,908 17 9		
Total, ...	£36,360 14 10			£38,049 4 9		

TABLE II.

	Glasgow.	Edinburgh.
Repairs and Maintenance on Buildings, ...	£630 2 7	£144 8 11
,, ,, Machinery and Plant,	1686 17 7	1476 8 4
,, ,, Instruments, ...	31 5 6	11 6 1
,, ,, Mains, ...	1293 12 10	577 9 1
,, ,, Meters, ...	676 18 0	69 16 6
	£4,318 16 6	£2,279 8 11

Gas is greatly responsible for the greater cost of maintenance of the mains in Glasgow, where the manholes have to be continually examined and ventilated. How meters are maintained in Edinburgh for £69 per annum I do no know, it is not the wage of one man. There is also another side to repairs and maintenance, it is not merely the question of how much per unit have they cost: But what is going to be the life of the plant? In what condition is the plant at the end of the year?

Edinburgh seems to get off very easily in the matter of rates and taxes, for while Glasgow pays £2256, Edinburgh only contributes £1535.

On management, the same remarks can be made as on wages.

With respect to the depreciation and sinking fund, the difference between the two cities' accounts is borne out by the percentage which these bear to the Capital invested, for while it is 6·35 per cent. in Glasgow, it is only 2·96 per cent. in Edinburgh.

If Glasgow had adopted the Edinburgh figures of 2·96, instead of 6·35, there would have been a surplus of £7,771 or £747 more than Edinburgh.

Referring to the two load curves, Plate VII., the one for Glasgow, the other for Edinburgh, I should like to explain that, in Glasgow, from 11.30 p.m.; and throughout the night till 7 a.m., there is a battery charge of 750 amperes. The 23rd December, 1897, seems to have been a dull day in Edinburgh judging by the peak of the curve at 12.30 p.m.; and the larger Edinburgh output from 5.30 p.m. till midnight, is partly accounted for by the large number of street lamps. To ascertain the watts delivered to the lamps, the Edinburgh curve must be multiplied by 230 volts, and the Glasgow by 200 volts.

It is a commonly accepted statement that as the Supply Station increases, the cost per unit will very materially decrease. This is true to a limited extent, but depends in a very great degree upon the time factor in the maximum demand. Mr Wright in his paper on the cost of electrical supply says; "The sum total of all stand-by expenses follow, as a rule, the rising line connecting the annual

maximum demand on the mains," and I think it will be self-apparent that the cost per unit generated, when the peak of the curve is very sharp, will be much higher than when the maximum load continues for some time, the longer the better.

A unit of electricity as already stated consists of three elements, namely pressure, current, and time. The pressure being a constant, it may be put aside seeing we are not able to alter it; we have thus left two elements, current and time, which are both variable. Now current costs something to produce, and time does not, so that if any method can be devised, to place a tax on the current and put a premium on the time, so that the units to be paid for will increase in time and be reduced in current, it will greatly tend to diminish the cost per unit in the station. When units have more current than time in them the consumer should pay more than when the reverse is the case, for example—

If A's units are 50; made up of 100 volts, 250 amperes, 2 hours, and
B's „ 50; „ „ 100 „ 25 „ 20 „

it means that A requires plant to the extent of 40 H.P., and B only 4 H.P., to be erected in the supply station for their use respectively, and the copper in the street has to be ten times heavier for A than for B.

This can easily be shown to be the case from the different conditions under which the supply has to be maintained for lighting. Take the mercantile offices whose requirements extend over only the winter months; they shut not later than 5 o'clock, and therefore do not use light more than about from ·7 to 1 hour per day at the outside. Large warehouses and many shops, which close at about 7 p.m. and 2 p.m. on Saturdays, will require light for about 1·12 to 2 hours per day; public houses, 2·5 to 4 hours per day; hotels, about 3 hours per day; clubs, about 5 hours per day; and motor power may be anything up to 8 hours per day. Public lighting, when all the lights are used throughout the night, will reach 10·6 hours per day.

The annual expenditure of a Supply Station is made up of the following items:—

1. Interest on capital.
2. Sinking fund.
3. Depreciation on plant.
4. Management.
5. Rents, rates, and taxes.
6. Wages and salaries.
7. Repairs and maintenance.
8. Fuel.
9. Oil and stores.

Of these the first seven items are, to a very large extent, independent of the amount of current generated; whether the peak of the curve be a sharp or a flat one makes no difference on these items, only the two latter are affected by the total amount of the load; and, when it is said that these two only cost, in a fairly developed and economically worked station, not more than ·5 of a penny per unit, the seven items of cost which are the same for all loads, must be considered the ruling factors in the charge. These costs have been called standing charges. They remain the same, and have all got to be met, whether the plant supplies one unit or a thousand, or whether lamps are used for one hour each day or ten hours per day. If lamps are used for one hour per day, that hour's lighting must pay for all these standing charges, while if used for ten hours lighting, the charge is the same, the only extra expense being in fuel and stores.

There are, therefore, two conditions to be met in making the charge; viz.:—

(1) A very varying demand from ·7 to 10 hours per day; and (2) a cost that is independent of the time, and entirely in proportion to the amount demanded.

A uniform rate with discounts in no way meets these conditions; in fact, it does quite the reverse, for it is quite possible for a consumer to so increase the number of units he uses, by the addition of lamps, to enable him to benefit by the discount to such

an extent that, from being a profitable customer he becomes a loss to the undertaking. Nor does a uniform rate without the discounts meet the case, as it forces the undertakers to make the long hour consumer pay for the loss incurred in supplying those who do not use sufficient energy to pay for their proportion of the standing charges. In a very short time—when the mains have been extended beyond their present limits, to such districts as Bridgeton Cross and New City Road—the great bulk of the consumers will be of a class that will require light to 8 or 9 o'clock at night, and it would be an injustice to them, as well as all small consumers, who are generally long hour users, to make them pay for the losses incurred in supplying the great bulk of offices and large establishments in Buchanan Street.

The late Dr Hopkinson was, I believe, the first to see the necessity of making a charge that would recognise these different demands, and the great importance in reducing the charge as the time factor increased. To carry out this principle, different systems of charging have been imposed, so that each user requires first to pay his own proportion of the fixed charges.

The amount expended on plant and mains, put down for the supply, is determined by the requirements of those demanding the supply, and the yearly extensions are to a very great extent governed by the maximum load on the works. Maximum output, or demand, as shown by Mr Wright and already quoted above, is followed very closely by the standby charges. It therefore follows that, if a charge can be made on the demand of each consumer that will meet these fixed charges, a small charge can be made per unit metered to pay for fuel and stores. But here it may be said that, the maximum demand of each consumer does not necessarily amount to the total number of lamps on his premises, nor does the actual maximum of the town amount to the aggregate maximum of each consumer. These points necessarily raise the questions: On what demand is the first charge to be made? And how is the demand of each consumer to be determined? The actual maximum demand on any Supply Works never exceeds, and is generally below, 50 per cent. of

the quantity required, if every light and appliance attached to the mains are in use at one time. There are some lamps that are only occasionally lighted, and users make their demands at different times. A private house, of say 100 lights, seldom has more than 25 lights burning at one time, while theatres light up after the city shops are closed. On what demand then has the charge to be made? There are two ways of considering a consumer's demand, either it is the number of lights installed, or it is the greatest number of lights used at any one time. If the charge is made on the number of lights originally put into a house, then the consumer will only adopt such lights as are absolutely necessary, leaving them out in basements, back premises, kitchens, passages, and perhaps bed-rooms. To prevent the consumer putting lights in places where they would perhaps only be used for a very short time, and which would be a very great convenience to the user, would naturally take away from the Supply Company a very large source of income. In other words, this system of charging puts a tax upon all lights, and in consequence tends to reduce the number of lights attached to the mains. If the charge, however, is made on the greatest number of lights in use at one time, then there is no restriction on the number installed, and odd lights can be used throughout the day without increasing the demand.

Mr Wright, of Brighton, was one of the first to recognise the necessity of carrying out, in some practical way, these principles; and he set himself to devise an instrument that would indicate the actual demand of each consumer. For this purpose he brought out what has been called the Demand Indicator. The current to be measured passes round a glass bulb at one end of a U-shaped air thermometer, the liquid in which rises in the right-hand limb, is trapped, and passes down into the indicating tube. The readings on the scale, alongside the tube, are calibrated to give either the amount of current used at any one time, or the number of units to be consumed per quarter or half year, at the initial charge, before any rebate is given.

I will now mention how these two systems of charging on the

demand work out, and in so doing will use the figures lately adopted by the Glasgow Corporation as follows:—

1. Under the first or Demand Indicator system, the rates are:—
   (*a*) Where a quantity not exceeding the maximum demand for 365 hours in the twelve months (being an average of one hour per day) is used, the charge is 6d per Board of Trade Unit.
   (*b*) All current consumed over the above quantity at 100 volts pressure, - - - - 2½d „ „
   (*c*) All current consumed over the above quantity at 200 or 250 volts pressure, - - - 2d „ „
2. Under the alternative or Fixed Charge system, the rates are:—
   (*a*) A fixed charge of 4s 6d per annum for each 8 candle-power lamp or its equivalent fixed in consumer's premises (or £7 4s per Kilowatt), this charge being spread uniformly over the twelve months; and,
   (*b*) An additional charge for all current used as recorded on the meter if taken at 100 volts pressure, - - - 2½d per Board of Trade Unit.
   (*c*) If taken at 200 or 250 volts pressure, - - - 2d „ „

Assuming the supply to be 200 volts in both cases, then under the first method the charges will be 6d and 2d per unit; and under the second, 4s 6d per 8 C.P. lamp and 2d per unit. One 16 C.P. 60 Watt lamp, lit only one hour per day for a year, will consume 21·9 units—practically 22 units—which at 6d, under method 1, will be 11s per annum, and under method 2, 12s 8d per annum, being (4s 6d × 2) + 22 units at 2d.

All additional hours of burning are charged at 2d per unit in both methods, so that no matter how long lights may be used, each 16 C.P. lamp will cost 1s 8d per annum more by the second system

under these rates; of course, it is quite possible to make them equal, a charge of 3s 8d per 8 C.P. lamp instead of 4s 6d would do so. This equality will hold good only when all the lamps are used for at least one hour per day. The great difference, which shows in favour of the charge being made on the actual demand, and not on lamps installed, is when we compare the two systems on lights that are not used for at least one hour per day. If the light is only used for one hour per week, that will mean a little over 3 units, say 3, which at 6d., under the first method, is 1s 6d, whereas, under the second method there is the lamp charge of 9s, and 3 units at 2d per unit, in all 9s 6d.

In my own house I have sixteen gas jets, of which not more than eight are alight at one time. If instead of gas I introduced sixteen C.P. lamps, on the demand system for one hour of burning throughout the year, the charge would be £4 7s 6d, whereas, if I have to pay an initial charge of 4s 6d per 8 C P. lamp and 2d per unit, the cost would be £8 11s. This naturally means that I should fix lights only in the public rooms. It is not only unfair but almost impossible to make a charge on the number of lamps installed. After one has completed his installation and finds a lamp would be a great convenience in an odd corner, which would in no way increase his demand on the station; Is he to put it up and pay, or put it up and say nothing about it? Does the Corporation intend to have a continual inspection of the number and candle power of the lamps? for consumers are continually making additions or deductions in their lights. Apart altogether from the question of changing lamps from a lower to a higher candle power, or *vice versa*, there is a possibility of a consumer wishing to reduce the number of his lights within the year. Why should he then be charged on lamps that have been discontinued?

Other methods have been suggested, and in a few instances tried, such as at Norwich; by Mr Andrew's, at Hastings; and by the Ayr Corporation. Mr Kapp and Mr R. P. Wilson have also suggested methods, by means of a time switch controlled by clockwork, so that all current used for a given time is charged at the initial price.

After that the switch goes over and the cheaper meter is used. The latter methods entail a very much larger expenditure in meters, double the number being required, in addition to the clockwork switches.

Some have raised the objection to such a mode of charge that, it is contrary to the Act of 1882, *Clause 20*, which says; "The undertakers shall not, in making any agreements for a supply of electricity, show any undue preference to any local authority, company, or person, but, save as aforesaid, they may make such charges for the supply of electricity, as may be agreed upon, not exceeding the limits of price imposed by or in pursuance of the license, order, or special Act authorising them to supply electricity.

Now, I hold that this mode of charge, in a very marked degree, does not contravene this clause, but is strictly in accordance with it, which cannot be said for the discount system. It has been held by the gas undertakers that, discounts on large consumption gives undue preference, as it permits a lower price for a large warehouse burning short hours, than for a small user or motor running long hours. The Demand Indicator is not hard on small consumers, as it puts the small consumer on the very same platform as the large; all have the same privileges, and all pay their exact proportion of the cost of production. This surely should be the object of all charge, that that which costs most should be paid for at the highest rate, and the less the cost of production the lower the rate. I believe these conditions are, as far as it is possible, met in the Demand Indicator System.

In dealing with the charges for electricity, I have not made any difference between electric lighting and power, but simply looked at the question generally, and considered that a consumer may use electricity for what purpose he pleases. It may be said, however, and that with a great deal of truth, that the consumer who uses electricity for power and not for lighting, is a better customer, and should be supplied at a cheaper rate. From the consumer's point of view this may seem an unanswerable argument, but let it be remembered that all consumers of power do not stop their works at

three o'clock in the afternoon when the peak of the load is coming on the station, hence plant has to be supplied to meet not only the lighting load, but the power load at the same time; and given a sufficiently low charge after the initial cost has been met, I see no reason why power consumers should not be charged the same as electric light consumers. Say the charge of 6d is made for the first hour and 1d afterwards, this would make it for power purposes practically 1½d a unit.

Many towns charge a different rate for power than for lighting; for instance, Edinburgh charges 3½d for lighting and 1½d for power; Manchester has a sliding scale for lighting from 5d to 1·69d according to the hours used, and a 1½d rate for motor power, provided a certain quantity is used.

In this connection an interesting paper was read by Mr Alexander Siemens before the British Association, in which special reference was made to the generation of energy in his own works at Woolwich, where there is about 1,000 H.P., with an annual output of 1,178,286 units, giving a load factor of ·18. According to Mr Siemens, the cost was 1·287 of a penny per unit, this included interest, depreciation, rent, and taxes, but not the loss in distribution. From this it appears that a large central station would be able to supply public works at a cheaper rate than they could make it for themselves. I fully believe the time is not far distant when a supply that is now being given at 1½d, will be reduced to something like ¾d per unit.

Discussion.

The discussion on this paper took place on 20th December, 1898.

Professor A. JAMIESON (Member) said that he was naturally very much disappointed with this paper. Mr Arnot stated that "A Board of Trade Unit is the integration of $C V dt$;" also, that "One Board of Trade Unit $= \int_{t_1}^{t_2} C V dt = 1000$." To this definition he (Prof. Jamieson) took exception; for, how could *one* equal a *thousand*!! A Board of Trade unit was simply the

name given to the energy developed by a kilo-watt-hour; or, 1000 Watt-hours; or, 1000 Volt-ampere-hours. Or, to put it still more plainly, it was the energy developed by 1·34 (say $1\frac{1}{3}$) horse power acting for an hour. Mr Arnot should have said that, what they had to measure, in order to obtain the value of electrical energy, was the time integral of the product of amperes and volts (or the integration of $CV\,dt$), and that that measure was expressed in Board of Trade units. There was no reference whatever in Mr Arnot's paper to the diagrams of the very few meters which he had illustrated, and in the diagrams themselves the electrical connections were insufficient to show how the currents circulated and acted in the meters. He defied any common-sense mechanical engineer to thoroughly understand any of the meters from Mr Arnot's descriptions and figures, except perhaps the "Wright Demand Indicator." From a person of Mr Arnot's ability, they had a right to expect clear and descriptive diagrams, which, when combined with the paper, would be intelligible to the youngest member of the Institution. Referring to his description of the Bastian meter, Mr Arnot said in the last sentence; "A small amount of sulphuric acid is put into the water to keep it from freezing." He (Prof. Jamieson) thought that the first reason for adding the sulphuric acid was, to enable electrolysis to take place, since pure water was such a good insulator that it required many volts (or a high pressure) to electrolyse it. The description and the figure of the Hookham meter referred to an old pattern. He (Prof. Jamieson) had brought with him the latest forms of Hookham's continuous and alternate current meters, which he laid on the table for inspection. He understood that several hundreds of these improved continuous current meters were now being connected up in circuit with the currents from the Glasgow Electric Light Stations. In regard to the Ferranti meter, Mr Arnot was very particular in quoting Mr Ferranti's description, but he entirely omitted to mention, what was equally interesting and ingenious, that one or both of the pole pieces (above or below the mercury bath) were made of steel, so that the retentivity for magnetism of

Prof. A. Jamieson.

this portion of the magnetic circuit might enable the meter to start with and register very small currents, and thus dispense with a shunt circuit, which used to be a wasteful and troublesome part of the previous form of Ferranti meter. In the description of the Elihu Thomson meter, Mr Arnot omitted to mention the use of the shunt coil for overcoming the frictional error of the instrument. He would, however, compliment Mr Arnot on his excellent figure of that meter, which, if it had been accompanied by letters and an index to the different parts, would have made its ingenious and well-designed mechanism still more intelligible. Mr Arnot gave a description of an old form of Aron meter, although he had the latest pattern on the lecture table before him! With regard to the Ferranti continuous-current meter, he (Prof. Jamieson) had found it an excellent one, and very largely adopted. Great care was, however, necessary to prevent the mercury from getting out of the central bath and causing even a partial short circuit of the current. In a recent test in connection with the Edinburgh electric light installation, he had proved this to be possible. In connection with Mr Arnot's remarks concerning the necessity for the independent inspection of meters, when there was any doubt as to their accuracy, he quite agreed. He was not in a position at present to criticise Tables I. and II. regarding the comparative cost of working the Edinburgh and Glasgow Central Stations, but he held in his hand a letter from one of their best-known local Members of Parliament, wherein he stated that a *bona fide* offer had been made in this country for the supply of current for a very large combined installation of light and power at 0·6 pence per Board of Trade unit! He had also visited a friend in Edinburgh who found it convenient and cheap to wire his house separately for light and for power or heating, as the Edinburgh Corporation distributed current for the latter purposes at only 1½d per Board of Trade unit. His friend found it more convenient and cheaper (under certain circumstances, especially at night) to have food, etc., cooked by electricity than by ordinary fires, when supplied with current at such a low rate. Certainly, there was no smoke, dust, ashes, or cleaning required,

where electric energy was the developer of heat. Finally, he thought the Institution had to thank Mr Arnot for bringing this paper before them, for very soon every member would have to deal with and pay for electric energy, and the more they learned of the apparatus by which it was measured, and how they were to be charged, the better.

Mr J. D. CORMACK (Member) said as he was not able to be present when the paper was read he had looked forward to seeing it in the Transactions; but he had been sadly disappointed with it. It bore evidence of having been written in haste, at all events, that was the most charitable construction one could put upon it. He was sure Mr Arnot could have given them an excellent paper on meters, or systems of charging for electric energy, but he had attempted both and failed to do justice to either. He would join with Professor Jamieson in protesting against the unnecessary introduction of the calculus; already it did not find much favour among engineers, and here it was introduced to make hazy, in fact to make incorrect, what was really a very simple definition. He thought it was a pity to abuse it. There were one or two good points in the paper, however. Mr Arnot remarked that a consumer could refuse to pay a disputed account that was not rendered from a meter duly certified by an inspector appointed by the Board of Trade; and he thought probably it was the case that such inspectors ought to be appointed. He expected also a discussion of the different systems in vogue in charging consumers, but such was absent. A very large number of systems were in use in many places, and that gave evidence of the fact that the question was attracting much attention, and that a satisfactory solution had not yet been arrived at. Probably in time they would be able to make a fixed charge for the quantity consumed, no matter what the quantity or the load factor was.

Mr E. GEORGE TIDD (Member) observed that Prof. Jamieson had criticised very fully the various matters entered upon in the paper, and doubtless Mr Arnot would make adequate replies. He was rather disappointed upon reading the paper, as, from the title, he

Mr E. George Tidd.

had hoped that the systems in vogue of charging would have received more attention than Mr Arnot had given them. Concerning the remarks about gas meters, on page 155, Mr Arnot said there was a system for checking gas meters, as if to imply, on that account, that such meters were always considered perfect. As a matter of fact, however, gas meters certainly had by no means good characters for accuracy, and he certainly believed electric meters had decidedly better ones. A table of figures was given with reference to the costs of repairs and maintenance for Glasgow and Edinburgh. These figures were open to considerable criticism. A very large quantity, if not the bulk, of the rubber cables which were originally laid, had by degrees to be removed and other kinds substituted, owing to frequent troubles. He had noticed, too (the very last time he was in Edinburgh), that the whole of the copper strips along Princes Street were being replaced. Now, under the items of repairs and maintenance of mains for Edinburgh, the sum of £577 odds was given. What was included under that figure? The work above suggested obviously could not be. Perhaps, however, such items as those were put down to capital account, in which case it would be easy to make costs for maintenance come out at any desired figure. He could not agree with Mr Arnot's remarks on the last page of the paper dealing with the charges for electricity. He certainly thought that the users of power should have the preference over the users of light, though he was open to admit that in isolated cases the user of light might be as good a customer. It was true, as Mr Arnot pointed out, that often the user of power also wanted his maximum demand at the time of heaviest load, but then it should be borne in mind that the machinery which had to be put down to supply that was kept more or less actively employed throughout the whole year, so that the income earned by it was very much greater than if it were employed for lighting alone. Prof. Jamieson remarked about the Ferranti meter, presumedly to show that that instrument had to be carefully handled, but personally speaking he would be only too pleased to have a bubble of mercury getting out of his meter and in

consequence be charged with only a fractional portion of the energy consumed. He did not know whether it was for that reason that Prof. Jamieson's client objected to the meter.

The discussion on this paper was resumed on 24th January, 1899.

Mr H. A. MAVOR (Member) considered that the subject of the paper was an exceedingly interesting one, and it would become more interesting with the extended use of electricity and electric meters, as Mr Arnot had pointed out. Speaking as a user of electric meters, he was bound to say that they possessed the same fault as gas meters —they charged too much. Possibly that was not altogether the fault of the meter, but partly at the rate charged, which would not be amended until the supply was on a more extended basis. They might hopefully look forward to the time when they would have electricity in Glasgow at the reasonable price of say 2 pence per unit. A very important point raised by Mr Arnot was the question of differential charging, and, while some speakers in the discussion seemed to have indicated that they might look forward to a time when a uniform charge would be made all round, he did not think that that was likely to occur; because the supply of electricity differed in many important respects from the supply of such commodities as gas and water, which could be more properly supplied at a uniform rate of charge. Electricity was supplied direct from a prime mover which stood idle and unproductive when the product was uncalled for, and therefore the consumer (who used the power for, perhaps, only 300 hours per annum) was responsible for a portion of the interest and depreciation of the plant for the remaining hours of the year, and ought properly to pay a higher rate; so that the question of differential charging was one which would likely remain for all time. The introduction of a differential charging meter would result in additional cost both to the vendor and consumer of electricity, which cost could, in his opinion, be saved by a very simple expedient; viz., to take the meter indication for a year and compare its total with the possible maximum demand by the consumer. The ratio of the meter reading to the possible maximum demand gave the load factor, and the uniform charge would be

Mr H. A. Mavor.

subject to a discount depending upon how nearly those two figures approached one another. He had experimented with this method in public supply in Glasgow and found it to operate very satisfactorily. The discounts given to customers varied from five to forty per cent. of the normal charge of 8 pence per unit.

Correspondence.

Mr C. A. MATTHEY (Member)—Had listened with interest and profit to Mr Arnot's paper, and read with a feeling of surprise the criticism of his friend Professor Jamieson, who had treated Mr Arnot with what he (Mr Matthey) considered uncalled-for severity; because symbols of integration had been used in order to show what variables a given machine was summing up. Surely if there were a legitimate occasion on which the integral notation might be employed, it was in distinguishing between meters which recorded current only and those which took into account the voltage also, supposing that to vary. No one could condemn more than he did the art of "how to make a little calculus go a long way," or any other pretention to knowledge not really possessed. But the symbols of integration had a value apart from the operation of integration; they showed at a glance the summation under discussion; they substituted for a long sentence a few letters and figures; in fact, they constituted a species of mathematical shorthand. One could not have had a better instance of that than was given in the paper read by Prof. Biles, on the same evening as Prof. Jamieson uttered his strictures on Mr Arnot. Prof. Biles, so far from expressing his curves by equations and integrating their areas, gave on the contrary a simple arithmetical process of finding them. Yet he could scarcely avoid using the integral symbols, in a manner to his (Mr Matthey's) mind justifiable if not inevitable. It was to be hoped that members would not be deterred from communicating papers by fear of such censorship as that of the learned Professor. How could 1 equal 1000? he asked. One kilogramme equalled 1000 grammes, and 1 kilometre equalled 1000 metres; and, in his own words, one Board of Trade unit equalled 1000 volt-ampere-

hours Mr Arnot said that the unit was equal to the integral when the integral equalled 1000, which was precisely the same thing.

Mr W. B. SAYERS (Member)—Would like to ask Mr Arnot whether he could give, in his reply, any information concerning the average percentage of error in the records of the types of meters of which he had had experience—especially at low readings. It was of the utmost importance to the supply station that, the small currents due to odd lamps burning long hours should be fully metered. He was also curious to know with what amount of accuracy the transient current taken by an electric light was registered on the meters in general use. The ordinary journey of an electric elevator lasted from 10 to 25 seconds; the current was comparatively large at starting, and this was no doubt helpful to the meter in giving it a good start, so that perhaps the record might not be very far wrong. Mr Arnot's figures of comparative costs of generating electricity in Edinburgh and Glasgow were very interesting; and the exposition of the considerations which had led to the introduction of Wright's system was good. The main difficulty with the latter system was in getting people to understand it, and he believed it was chiefly that difficulty which induced Mr Chamen to recommend the adoption of the alternative system of charging a fixed rate for each lamp put up, in order to cover standing charges.

Discussion.

Mr ARNOT, in reply to the discussion and correspondence, thought it unnecessary to refer to the first part of Professor Jamieson's remarks, as that had been answered by Mr Matthey. It was a great pity that Professor Jamieson favoured destructive rather than constructive criticism, as a little of the latter would have been more beneficial to the Institution. He could not agree with Mr Tidd's idea that users of power should have preference over users of light. The number of hours during which the supply was taken should alone govern the charge, quite independently of the use to which the energy was put. Mr Tidd said it should be

Mr Arnot.

borne in mind that the machinery which had to be put down to supply a power user had to be kept more or less actively employed throughout the whole year. That was precisely the point that should be kept in mind, for whenever the user paid his standing charges he was supplied at a very low rate. Mr Sayers solicited information regarding the percentage of error in meters, especially at low readings. Any figures giving such an average would be misleading, particularly with respect to mercury meters. The errors ranged from 2 per cent. to 5 per cent. between $\frac{1}{10}$ of the load and full load. Below $\frac{1}{10}$ of the load the error was very variable, and depended largely on the previous history of the meter, the strength of the magnetic field, and the purity of the mercury. The starting current varied from ·08 to ·3 of an ampere—about ·2 was a fair average. He remembered a very interesting test on two Ferranti meters, which were employed in a photographer's establishment for measuring currents of short duration. A cluster of about eighty 50-candle power 90-volt, incandescent lamps, were connected, two in series, across the outer wires. These were put on for about 10 seconds, by means of an ordinary double-pole switch. On one side of the system, between one of the outer wires and the middle wire, the lamps of the house were fixed. Before the double-pole switch was closed, which put the photographic lamps into circuit, the one meter moved slowly while the other was at rest. From tests taken on the two meters by Mr W. R. Wilson, it appeared that the registration of the meter that was at rest before the double-pole switch was closed, was low; but the registration on the meter that was moving slowly before, was about 25 per cent. too high. These meters were subsequently removed, and Lord Kelvin's substituted. Meters of the Aron type were possibly the best suited for that class of work. He found, generally speaking, that consumers whose consumption enabled them to benefit by the demand system, understood it well enough to appreciate it, while those whose consumption was limited as to time, generally took exception to the system. He feared that Mr Mavor was not quite clear on the mode of making the charge. Mr Mavor, at the end of the year, took the

ratio of the meter reading to the possible maximum demand and allowed a discount, based on that ratio.

Taking the four following examples, each at 100 volts:—

	Possible maximum demand.	Actual maximum demand.	Hours in use per day.	Units per year.	H.P. required.
A	20 amp.	20 amp.	½	365	3·0
B	20 „	10 „	1	365	1·5
C	20 „	5 „	2	365	·75
D	20 „	1 „	10	365	·15

The possible demand was the same in each case, and the meter reading at the end of the year was also the same, therefore the ratio, or as Mr Mavor called it, the load factor, was the same. How would he then differentiate between these users? They would each be charged by Mr Mavor's system at the same rate, though A took a plant 20 times larger to supply his actual demand. Plant was never provided for the possible maximum demand.

On the motion of the PRESIDENT, a vote of thanks was awarded Mr Arnot for his paper.

ON M. TCHEBYCHEFF'S FORMULA

By Professor J. HARVARD BILES.

(SEE PLATE VIII.)

Read 20th December, 1898.

THIS paper has been prepared with a view to calling the attention of members of this Institution to a method of calculating areas of curves which has some merits in the direction of simplicity, and to giving some results of the application of the rule. A full account of the mathematical investigations on which the rule is based may be found in a paper by M. Radau in the *Journal de Liouville*, 1880, on "An Approximate Formula for Calculating the Numerical Value of a Definite Integral;" and also a discussion of the rule may be found in the *Bulletin de l'Association Technique Maritime*, No. 4, Session 1893, by Professor M. A. Kriloff.

The importance of having a simple rule for finding areas of curves is evident to all in the habit of making the usual calculations connected with ship design and construction. It may be stated generally that, all the calculations which are made in connection with ship forms resolve themselves into finding the area of a curve or a series of curves. Take the case of finding the displacement of a ship-shaped form: we first find the areas of a series of plane sections, and then treat these areas as the ordinates of a new curve. This curve gives the area of a cross section parallel to the calculated planes of section at any chosen position in the body. The area of this area-curve gives the total volume.

To find the centre of gravity of the solid of displacement, we have only to multiply chosen ordinates of the area-curve by distances from some axis for moments, and we can obtain ordinates for a new curve, each ordinate of which represents the moment of a section of elementary thickness about the chosen axis. Summing up all these

moments, we obtain the moment of the solid. Hence the determination of the moment of the solid resolves itself into determining the area of the moment-curve.

The same thing applies to finding the metacentres, internal volumes or tonnages, etc., etc.

The reason for this is obvious—in determining some quality connected with a continuous solid, we have to sum up the qualities of the elements of the solid, which together go to make up the whole; hence the operation is one of summation, or, as it is called mathematically, integration.

If we can put down in a graphic form the items which we wish to sum up, the summation resolves into finding the area of the curve by which we have graphically represented the quantities we have to sum.

In the case of a simple curve, Fig. 1, the summation is represented by finding the value of $y \,.\, \Sigma dx$, which is generally written $\int_b^a y \,.\, dx$.

If we have another summation to make in which y is not simply expressed as y, but as some complex combination of y, such as—

$$y^2 \,.\, dx,$$
$$\text{or } y^3 \,.\, dx,$$

we may write for y^2, Y_1 or for y^3, Y_2, and so express our summation as $\Sigma Y_1\, dx$, or $\Sigma Y_2\, dx$. Where the values Y_1 and Y_2 will be the ordinates of a new curve, each ordinate of which represents the y^2 and y^3 of the original curve. A list of integrals representing some of the operations in ship calculations, is given in the Appendix, p. 189.

Before describing Tchebycheff's Rule, it may be interesting to say a little about some rules which are in common use. The simplest is known as Simpson's First Rule, and is based upon the assumption that the curve whose area has to be found coincides (to the required degree of accuracy) with a series of parts of common parabolas.

Suppose A B C D, Fig. 2, to be a curve whose area is required; A B, B C, C D, are each assumed to coincide with the common parabola which will pass through the extremities of the ordinates

$y_1\ y_2\ y_3$, $y_3\ y_4\ y_5$, $y_5\ y_6\ y_7$, respectively. These ordinates are equidistant, and if h be the interval between them, the area of the curve =

$$\tfrac{1}{3}h\ (y_1+4y_2+2y_3+4y_4+2y_5+4y_6+y_7)\ \ldots\ldots\ldots\ldots(1)$$

This Rule is based on the simpler case of three ordinates such as $y_1\ y_2\ y_3$; the area of the curve between y_1 and y_3 being = $\tfrac{1}{3}h\ (y_1+4y_2+y_3)$. If we make up any number of sections, such as A B, B C, C D, and find the area of each separately, we shall obtain the same result as is obtained in (1). This is the most commonly used rule in ship calculations in this country.

Another is known as Simpson's Second Rule, and is expressed by $\tfrac{3}{8}h\ (y_1+3y_2+3y_3+2y_4+3y_5+3y_6+y_7)$. It is founded on the rule for the area between ordinates y_1 and y_4 which is

$$\tfrac{3}{8}h\ (y_1+3y_2+3y_3+y_4).$$

The Rule most commonly used in France is that known as the Trapezoidal Rule, and is based on the assumption that if we take the ordinates of a curve, the area of which we wish to find, close enough together, we can join the ends of consecutive ordinates by straight lines, and the area of all the trapezoids formed by two consecutive ordinates will approximate to the area of the curve within any required degree of accuracy. In Fig. 3 $y_1\ y_2$ are two consecutive ordinates, and $\frac{h}{2}\ (y_1+y_2)$ will be the approximate area of the part of the curve between these ordinates. Extending this to seven ordinates, the area will be =

$$\frac{h}{2}\ (y_1+y_7)\ h\ (y_2+y_3+y_4+y_5+y_6).$$

Obviously, the accuracy of this Rule, as also of the others, depends upon the closeness of spacing of the ordinates.

In all these cases the ordinates are spaced equi-distantly, though for some purposes intermediate ordinates are introduced, but they always bear a direct proportion to the equally spaced ordinates. In Tchebycheff's Rule, the ordinates are unequally spaced and always

bear a definite proportion to the length of the base of the curve to be integrated. The area of a curve may be found by Tchebycheff's Method with 2, 3, 4, 5, 6, 7, or 9 ordinates, or with any multiples or combinations of these. With 8 ordinates there is no practical rule.

Table A gives the spacing of these ordinates in proportion to the half-length of the base of the curve. When the ordinates have been drawn in their proper places, they are measured off and

TABLE A.

TCHEBYCHEFF'S ABSCISSÆ.

2.	3.	4.	5.	6.	7.	9.
...	...	...	...	...	...	·91159
...	...	...	...	·8662	·88386	·60102
...	...	...	·8325	·4225	·52966	·52876
...	·707107	·794654	·3745	·2666	·32391	·16791
·577350	·000000	·187592	·0000	·2666	·00000	·00000
·577350	·707107	·187592	·3745	·4225	·32391	·16791
...	...	·794654	·8325	·8662	·52966	·52876
...	...	...	...	...	·88386	·60102
...	...	...	...	...	...	·91159

added together, the total sum being multiplied by the whole length of the curve and divided by the number of ordinates. The simplicity of this rule is obvious. With 9, the maximum number of ordinates, the work is no more than with 9 ordinates in the case of the Trapezoidal Rule.

The question of the mathematical accuracy of this rule has been discussed very fully by Professor Kriloff, and he has given some examples showing the extent of the inaccuracy with a varying number of ordinates. A summary of his results, all reduced to coefficients of area or ratios of the actual area of the curve to the circumscribing rectangle, is given in Table B.

There are two sections, one amidships, and one at about one-third of the length of the ship from aft. Results are also given for the load water-line. Results by Tchebycheff's Rule are also compared with Simpson's, and in some cases with the Trapezoidal Rule. I have also extended the comparison to the cases for the midship section for 2, 3, 4, 5, and 6 ordinates. The results are given in Table C.

TABLE B.

	Midship Section.	After Section.	Load Water Line.
Exact value, ...	·8351	·5903	·80662
Tchebycheff, 7 ords. ...	·8354	·5904	·8076
„ 9 „ ...	·8348	—	·8064
„ 14 „ (two series, 7 each)		—	·8066
Simpson, 8 ords. ...	·8341	·5942	—
„ 10 „ ...	—	·5914	—
„ 21 „ ...	—	—	·8064
Trapezoidal, 21 ords. ...	—	—	·8033
„ 21 „ and 3 half ords. at each end,			·80665

TABLE C.

	Midship Section.
Exact value, ...	·8351
Tchebycheff, 2 ords.	·8540
„ 3 „	·8468
„ 4 „	·8896
„ 5 „	·8378
„ 6 „	·8352

In order to test this matter in a more practical way, the rule has been applied to find the displacement of several forms of varying degrees of fineness; and Simpson's First Rule and the Trapezoidal Rule have also been applied to the same forms. The displacements have also been found by Amsler's Integrator, and the comparative results are given in Table D.

TABLE D.

Displacement by Four Methods.

Method.	Cargo and Passenger Ship. 540′ × 59′.	Torpedo Boat. 151·3′ × 16·4′.	Passenger Ship. 270′ × 35′.	Mail Steamer. 540′ × 64′.	Full Cargo Boat. 168′ × 25′.
	Tons.	Tons.	Tons.	Tons.	Tons.
Tchebycheff's, -	18,419	155·26	1142·9	15.666	1110·15
Integrator, -	18,371	153·17	1141·4	15,560	1105·50
Simpson's, -	18,294	152·80	1137·6	15,310	1101·00
Trapezoidal, -	17,559	150·66	1118·8	14,497	1060·00
Block Co-efficient,	·72	·44	·48	·63	·78

Table E shows the results for a particular form by the four different methods, of the calculation of displacement, area of water-line, area of midship section, and position of centre of buoyancy both horizontally and vertically. In each of these cases the number of ordinates for water lines by Tchebycheff's Method is 7, and for sections 5. The corresponding numbers for Simpson's and the Trapezoidal Rule are 17 and 9 respectively.

TABLE E.

Particulars of S.S. 270′ × 35′ by Four Methods.

Method.	Displacement.	Area of W. Line.	Area of Mid-Section.	Vertical C. B.	Horizontal C. B.
	Tons.	Sq. Feet.	Sq. Feet.	Feet.	Feet.
Tchebycheff's, -	1142·90	5893·6	271·00	5·191	2·404
Integrator, -	1141·40	5892·8	271·36	5·160	2·334
Simpson's, -	1137·60	5818·5	270·50	5·203	2·376
Trapezoidal, -	1118·13	5805·0	265·05	5·272	2·457

Table F shows all the work necessary to find the displacement up to a given water line by the Tchebycheff Method. The figures in the columns headed totals are the arithmetical sum of the ordinates The factor is the product of the length and the draught, divided by the product of the number of ordinates in each integration and by 35 to change cubic feet to tons.

TABLE F.

DISPLACEMENT BY TCHEBYCHEFF'S METHOD.
S.S. 270′ × 35

No. W. L	Abscissæ for Half Depth.		Abscissæ for Half Length.							Totals.
			·88386	·52966	·32391	Midship Section.	·32391	·52966	·88386	
			119·32 ft.	71·5 ft.	43·72 ft.	0	43·72 ft.	71·5 ft.	119.32 ft.	
			Sections.			Midship Section.	Sections.			
			1	2	3	4	5	6	7	
1	·8325	3·82 ft.	2·40	12·65	16·00	17·5	14·25	9·94	2·10	74·84
2	·3745	1·72 „	1·82	11·05	15·10	17·25	13·60	9·10	1·80	69·72
3	0	0	1·21	9·49	14·00	16·62	12·52	8·00	1·40	63·24
4	·3745	1·72 „	·82	7·22	12·21	15·35	11·04	6·75	1·00	54·39
5	·8325	3·82 „	·25	3·05	6·80	8·60	6·50	3·50	·30	29·00
			6·50	43·46	64·11	75·32	57·91	37·29	6·60	291·19
										3·967
										1155·15 Tons.

$$\text{Factor} = \tfrac{1}{3} \times \tfrac{1}{7} \times \frac{270' \times 9' \times 2}{35} = 3{\cdot}967$$

Tables G and H show the work that is necessary to find the horizontal and vertical position of the centre of buoyancy.

TABLE G.

HORIZONTAL C.B.

	Sums of Ordinates.		
After Body, ...	6·50	43·46	64·11
Fore Body, ...	6·60	37·29	57·91
Differences, ...	–·10	6·17	6·20
Distances, ...	119·32	71·5	43·72
	–11·932	441·155	271·06

–11·932

429·223
271·06

291·19 | 700·283

2·404 C. B. Abaft midship section.

TABLE H.

VERTICAL C.B.

	Sums of W. Lines.	
Above Middle Line, - -	74·84	69·72
Below Middle Line, - -	29·00	54·39
Differences, - - -	45·84	15·33
Distance from Middle Line,	3·82	1·72
	175·10	26·367

175·10

291·19 | 201·467

·691

Middle Line Distance from Base, 4·5

5·191 C. B. above Base.

Table K shows the work that is necessary to find the area of a water line.

TABLE K.

AREA OF 9·0′ WATER LINE.

2·5	13·0	16·2	17·5	14·5	10·3	2·4

Sum of Ordinates = 76·4
Factor 77·142

5893·64 Area.

$$\text{Factor} = \frac{\text{Length} \times 2}{7} = \frac{270 \times 2}{7} = 77{\cdot}142.$$

Table L gives some results of calculations with a very small number of ordinates by Tchebycheff's Rule. On the left hand side is the result of the calculation by Simpson's Rule, with 17 ordinates longitudinally and 7 vertically.

TABLE L.

COMPARISON OF RESULTS BY TCHEBYCHEFF'S & SIMPSON'S METHODS.

	Simpson	Tchebycheff.			
No. of Ordinates:					
Longitudinal,	17	7	4	3	2
Vertical, ...	7	5	4	3	2
Displacement, ...	1663·2	1668·4	1677	1623·4	1490·2
C.B.fromMid-Sec.,	3·25	3·36	2·245	3·84	7·8
C.B. above Keel,	6·8	6·787	6·707	6·770	7·09
B.M. Metacentre above C.B.,	8·2	8·307			

From these tables it will be seen that with seven ordinates longitudinally and five vertically, Tchebycheff's Rule compares very closely with Simpson's, with much closer spacing; but that with less than four ordinates longitudinally and four vertically, the results are not very reliable; though in the matter of displacement, even with three longitudinal and three vertical intervals, there is only an error of $2\frac{1}{2}$ per cent.

Tchebycheff's Method is not very readily applicable to finding displacement for a graduated series of water-lines. With Simpson's Rules it is possible to find the displacement, up to say six feet, by water-lines spaced two feet apart, the portion of the volume between the keel and the two-feet water-line being divided by a one-foot water-line. Beyond this the displacement from six feet to ten feet can be found by water-lines two feet apart, and added to that up to six feet; and so on for any number of multiples of four-feet draught. All these water-lines go to make up the total number of ordinates necessary to find the displacement up to the load water-line; and with a very small amount of additional work it is very easy to find the displacement at draughts of six, ten, fourteen feet, etc. By the Tchebycheff Method, having unequally spaced water-lines, the displacement at one water-line has practically no relation to that at another, so that to find the displacement up to a series of water-lines requires an amount of work about in proportion to the number of water-lines for which the displacement is required.

Probably, the greatest advantage is to be obtained from the use of the Tchebycheff Rule for displacement, by taking the ordinary set of lines and drawing in the half-breadth the position of the Tchebycheff ordinates, nine in number. Sum up the ordinates for each water-line separately, and make of these sums a curve whose ordinates are spaced as the water-lines. To obtain displacements to different draughts, by finding to these draughts the area of this curve, Simpson's Rules may be used more advantageously than Tchebycheff's, and an integrator or planimeter still more so. Tchebycheff's Method may be also applied to find the C.G.'s and moments of W.L.'s longitudinally, as well as the longitudinal and transverse moments of

inertia, and these results plotted in a similar way to those of the areas. By integration by any method from these curves, the longitudinal and vertical C.B.'s may be found.

Generally, the Tchebycheff Method may be used longitudinally for finding all the qualities connected with water-lines, but when the integration is vertical and is required to be done for more than one stage vertically, the Tchebycheff Method does not economically apply. To find the stability of a ship in any condition of lading, necessitates a knowledge of the position of the C.B. for any displacement at any angle of heel; and also the position of the C.G. of the ship in that condition. The polar method of integration, known as Barnes' Method, gives the relative horizontal position of the C.B. and the C.G. The longitudinal integration of

$$y \,.\, dx, \qquad y^2 \,.\, dx, \qquad y^3 \,.\, dx,$$

is first performed for submerged and emerged wedges for a series of radial planes. These values are then integrated polarly, and the values :—

$$\tfrac{1}{2}\int\int y^2 \,.\, dx \,.\, d\theta = \text{Volume of Wedge},$$

$$\tfrac{1}{3}\int\int y^3 \,.\, dx \,.\, d\theta = \text{Moment of Wedge},$$

are obtained. These two operations of longitudinal and polar integration are usually done by Simpson's Rules. Tchebycheff's Rules will more simply and quite as accurately do the longitudinal integration, but the objection which has been stated to their use for finding displacements at gradually increasing water-lines applies to their application to polar integration. It seems that the combination of Tchebycheff's for longitudinal integration and Simpson's for polar, will give a simpler method of obtaining stability polarly than by the ordinary Barnes' Method, where Simpson's Rules are used throughout.

If we want to find a cross curve of stability, that is, a curve of horizontal variations of C.B. in terms of draught for a given angle of heel, the longitudinal integration can, as before, be most simply performed by Tchebycheff's Method. The two methods of obtaining

the position of C.B. for a given draught are: *1st*, Find the area and moment of each of a series of transverse sections and integrate these longitudinally; *2nd*, Find the area and moment of each of a series of parallel water-lines and integrate the results vertically. Tchebycheff's Rule applied to method (1) to find the area and moment of each section, involves drawing differentially spaced ordinates for each section, for each draught, and the work is very great. Applied to the finding of the area and moment of water-lines by method (2), the same difficulty, but to a much less degree, exists, as the inclined water-lines vary in length, especially in a fine ship, and the sections which would do for some water-lines will not do for all. If the areas and moments of equally spaced water-lines formed on the assumption that all the water-lines are the same length, be plotted so as to make a cross area- and cross moment-curve, we can apply Simpson's Rules to find the volumes and C.B.'s of the solids cut off by gradually increasing draughts. An example of this is given in Fig. 4, where the areas and moments of equally spaced water-lines found by Tchebycheff's Method are plotted, and the results integrated vertically by Simpson's, giving the cross curves shown in Fig 5. (K.N. is the perpendicular distance from the top of keel to the vertical through the C.B. in the inclined position.)

From these, curves of stability, as shown in Fig. 6, have been deduced, and the same curves obtained independently by the integrator are shown in dotted lines. The comparison is not a bad one, but on carefully examining the area- and moment-curves in Fig. 4, it was found that when water-lines were drawn more closely the curves were different. In Fig. 4*a* the spacing has been halved with the comparative results shown. This points to inapplicability of the Tchebycheff Method of integration to this calculation, and to the necessity for the use of the integrator in finding cross curves. No doubt, the greater the number of ordinates that are used the less error there will be in both Simpson's and Tchebycheff's Methods, but the error may be much larger in Tchebycheff's Method than in Simpson's for the same number of ordinates. Though the results of the integration of such erratic curves as are shown in Fig. 4,

does not in any case give widely different results from that obtained by the integrator, it may not always so happen.

The best method of obtaining the advantage of the simplicity of the Tchebycheff Method seems to be to make sections at intervals where Tchebycheff Ordinates come longitudinally, and to find the area and moment of these sections by the integrator. The simple addition of the Tchebycheff Method enables one to continually run the integrator round the sections from forward to aft and take only the final readings. This would naturally have to be done separately up to each draught at which it was desired to obtain results. The error due to water-lines being of unequal length would be as great in this case. To reduce the errors due to variation of length of water-line, it is necessary to increase the number of ordinates. Probably 14 in a full ship and 18 in a fine one would be necessary.

For many purposes the simplicity of the Tchebycheff Rule will lead to its adoption, but for some cases such as have been referred to, the cause of its simplicity will also be a cause of error. I trust that others may be interested in the application of this simple rule to cases where it can be suitably applied.

APPENDIX.

List of Integrals.

Area of Section	=	$\int y \,.\, dx.$
Moment of area about axis parallel to OX	=	$\frac{1}{2}\int y^2 \,.\, dx.$
Do. about axis parallel to OY ...	=	$\int xy \,.\, dx.$
Volume of Displacement	=	$\int\int y \,.\, dx \,.\, dz.$
Moment of Do. about plane of ZX	=	$\frac{1}{2}\int\int y^2 \,.\, dx \,.\, dz.$
Do. about plane of YZ	=	$\int\int xy \,.\, dx \,.\, dz.$
Do. about plane of XY	=	$\int\int zy \,.\, dx \,.\, dz.$
Moment of Inertia of Section in plane parallel to XY about axis parallel to OY...	=	$\int\int y^2 \,.\, dx \,.\, dy.$
	=	$\frac{1}{3}\int y^3 \,.\, dx.$

Discussion.

The discussion on this paper took place on 24th January, 1899.

Mr ROBERT CAIRD (Member) observed that the mathematics determining the figures of this formula were contained in two papers, of which he had not been able to obtain copies. He had sent for them, but they had not arrived, and all that he could do was to consider the examples that Prof. Biles had given, and, if possible, make some comparison with such particulars as he possessed. There were one or two little faults in the paper which might be corrected. On page 179, immediately over Table A, Prof. Biles said, "The area of a curve may be found by Tchebycheff's Method with 2, 3, 4, 5, 6, 7, or 9 ordinates, or with any multiples or combinations of these. With 8 ordinates there is no practical rule." It occurred to him that 8 was the multiple of 2 and 4. Then a little further on Prof. Biles said, "The total sum being multiplied by the whole length of the curve, and divided by the number of ordinates." He thought that Prof. Biles meant the base of the curve. These were mere verbal alterations and, perhaps, not of much importance. He had tried two actual cases, in order to see whether or not the results would show as close an approximation as did the figures of Prof. Biles, one of a single and the other of a twin screw steamer using a similar number of ordinates to those described by Prof. Biles; viz., for Simpson's Rule 17 longitudinal and 11 vertical, and for Tchebycheff's Formula 4 and 4, and 3 and 3—but he did not go to 2 and 2, because Prof. Biles had shown that it did not sub-divide sufficiently—and he found that in one case the approximation was extremely close. In the single screw steamer the displacement given by Simpson's Rule, with 17 longitudinal and 11 vertical ordinates, was 11,731 tons; and by Tchebycheff's Formula, with 7 longitudinal and 5 vertical ordinates, it worked out at 11,719 tons, which was extremely close. With fewer ordinates, viz., 4 and 4, he got 11,643, which was again very close indeed. With 3 and 3, instead of falling the displacement rose, it was 12,274, so that the approximation of the displacement corresponded very closely with that found by Professor Biles. In determining the distance of the centre of buoyancy from the midship section, he found very wide

Comparison of Results by Tchebycheff's and Simpson's Methods.

S.S.				
	SIMPSON.	TCHEBYCHEFF.		
No. of Ordinates, Longitudinal,	17	7	4	3
No. of Ordinates, Vertical,	11	5	4	3
Displacement, ...	11731·0	11719·0	11643·0	12274·0
C.B. from Mid. Section, ...	1·032′	0·706′	2·022′	3·094′
C.B. above Keel,	13·570′	13·460′	13·620′	13·660′

T.S.S.				
	SIMPSON.	TCHEBYCHEFF.		
No. of Ordinates, Longitudinal,	17	9	7	5
No. of Ordinates, Vertical,	11	7	5	5
Displacement, ...	13037·0	13161·0	13094·0	13088·0
C.B. from Mid. Section, ...	0·950′	1·222′	1·504′	2·146′
C,B. above Keel,	13·410′	13·260′	13·280′	13·385′

Mr Robert Caird.

discrepancies. In the particular case which he had just cited, he obtained, by Simpson's Rule, 1·032 feet; and by Tchebycheff's, 0·706, 2·022, and 3·094 feet, respectively; these figures showed a very wide divergency. On the other hand, the distances of the vertical centre of buoyancy above the keel were in close agreement—Simpson, 13·570 feet; and Tchebycheff, 13·460, 13·620, and 13·660 feet, respectively. In the case of the twin screw steamer, the displacement, according to Simpson's Rule, was 13,037; by Tchebycheff's Formula the displacement was 13,161 taking 9 and 7 ordinates, 13,094 taking 7 and 5 ordinates, and 13,088 taking 5 and 5 ordinates. The longitudinal centre of buoyancy from the midship section, according to Simpson's Rule, was 0·950 feet; and by Tchebycheff's, 1·222, 1·504, and 2·146 feet, respectively. The figures for the vertical centre of buoyancy above the keel were again very close, the results being, by Simpson's Rule, 13·410 feet; and by Tchebycheff's, 13·260, 13·280, and 13·385 feet, respectively. The result of the working, he thought, went to show that there was little, if anything, to be gained by this method, as against Simpson's Rule. It looked at the start as if much less work would be involved; but, as a matter of fact, the calculations required for the abscissæ sub-division, being arbitrary, were so much greater than by Simpson's Rule, that the whole operation was really more lengthy. Then, again, by Simpson's Rule, one could take out a different draught by simple subtraction, whereas by Tchebycheff's Method a start had to be made from the very beginning in every calculation, and there was more work involved. For these reasons he was inclined to look upon it in its application as an extremely interesting curiosity.

Mr W. J. Luke (Member) said Prof. Biles had a little to say about Simpson's First and Second Rules. If a very long curve had to be dealt with, it was customary to make a continued application of the Rules by taking the well known multipliers 1, 4, 2, 4, 2, 4, and so on, because the higher Simpson's Rules had multipliers which were very awkward to use. Some of those Rules were set out in Mackrow's pocket-book, but they had been carried still further by the late Mr Merrifield, and published in the British Association

Report for 1880. There any one would clearly see that Simpson's higher ordinary Rules were entirely prohibitive in their use; for instance, the outside multiplier for the rule of 11 ordinates came to $\frac{10}{598752}$, and of the various multipliers with which the ordinates would have to be affected the smallest was 16,067 and the largest 427,368. This gave the best clue to the reason that had led to the adoption of the Ordinary Method, continually using the First or Second Rule over and over again along the curve, and he thought that that might be done with Tchebycheff's Rules in the same way. Referring to Table A, they had Rules for 2, 3, 4, 5, 6, 7, and 9 ordinates. He considered that all the advantages which were to be obtained could be got from the first two Rules. It was perfectly obvious that, if they wanted to use the Rules as set out in the table they must have a book to see how the ordinate intervals were to be placed, but if a continuous application of the First and Second Rules were made this would not be necessary. In the columns headed 2 and 3 it would be seen that the fractional figure ·57735 was $\frac{1}{\sqrt{3}}$, and ·707 was $\frac{1}{\sqrt{2}}$, and anyone could remember these figures without carrying a book of rules about with him. If, therefore, they took a lesson from what had been the result of experience in working with the ordinary Simpson's Rules and did the same thing with Tchebycheff's, they would discard all the Rules applying to 4, 5, 6, 7, and 9 ordinates, and confine their attention to the Rules with 2 and 3 ordinates. The figures giving the ordinate positions could be remembered with no more effort than was necessary in the ordinary Simpson's Rules. Passing on to Table B, Prof. Biles said that he had taken it not from his own work, but from one of the original papers; these figures, therefore, called for no remark. Table C gave another comparison which he understood Professor Biles had made himself, and there he gave the exact value for a certain area, ·8351; Tchebycheff's Rules yielded satisfactory conclusions, except the 4

Mr W. J. Luke.
ordinate Rule which gave a result very distinctly wide of the mark. It was not apparent how that could be; it was, perhaps, a printer's error, and the figures should be ·8396 instead of ·8896. It was very singular, and if the figure was correct, it was another reason for avoiding the 4 ordinate Rule. As the actual detail figures were not before them, they could not positively check over the work, but it certainly looked a very curious result. The table for the displacement calculation, Table F, showed how compact was the work by Tchebycheff's Method. Table L gave comparisons between Simpson's and Tchebycheff's Methods, and at the top of the following page there was this remark, "From these tables it will be seen that with 7 ordinates longitudinally and 5 vertically, Tchebycheff's Rule compares very closely with Simpson's with much closer spacing." Did Prof. Biles intend it to be understood that with 7 ordinates longitudinally as good work could be accomplished as with 17 taken by the ordinary Simpson's Rule? Because if that was meant, he felt disposed to dissent from that conclusion. It seemed to him that, the best way to arrive at the number of ordinates necessary for the practical integration of a curve was to consider the number that was deemed sufficient to faithfully reproduce the curve graphically, then that would be a satisfactory number of ordinates by which to approximate to its area. It appeared very singular if it required 17 equally spaced ordinates to reproduce a curve which could be reproduced with sufficient exactitude by 7 ordinates spaced in another arbitrary way; and he would like to have seen a comparison with fewer Simpson's Ordinates and another column added. Possibly Prof. Biles might be able to do that, showing the comparison, say, with 9 ordinates longitudinally by Simpson's Method, and perhaps a somewhat less number vertically. He would be very much surprised if as good a result could not be obtained when using 9 ordinates with Simpson's Ordinary Rule, as with 7 ordinates by Tchebycheff's. While on this question of comparison, he might say that he had done a little work with this method. He used a very close spacing of ordinates vertically in a given case, and he did not think there could be any fault with the vertical

integration; he took 21 ordinates longitudinally with Simpson's and 12 with Tchebycheff's Method, and he found the results were very nearly 1 per cent. different from each other. With the 21 ordinates in Simpson's Rule longitudinally, one could very fairly reproduce the waterlines on paper, but with the 12 in Tchebycheff's Method that was not the case; he was, therefore, inclined to the opinion that, the discrepancy was more likely to be due to inaccuracy by Tchebycheff's Rule as applied by himself—the personal equation came in—than to any inaccuracies existing in the application of Simpson's Rule. However, every practitioner should try for himself and form his own conclusions in the matter of relative accuracy. In practical applications, it seemed to him that, in making what was commonly called a displacement sheet, work might be saved by using Tchebycheff's Rule for the longitudinal integration and the ordinary Simpson's Rules for the vertical integration, and it ought to be possible to devise a scheme where all the regular results might be obtained, and the usual figures at different draughts, with a saving of labour. At all events he intended to try that, because it was only by trial that one would be able to form any satisfactory conclusion as to which was the better of the two Methods, and whether any practical advantages were to be obtained by using Tchebycheff's Rules. He had also tried it in stability work and found that with the integrator there was a saving of time; it could be applied equally well to performing stability work with one or other of the planimetric methods, and this was another question well worth experimenting upon for the benefit of those who were not able to avail themselves of the integrator. It was generally supposed that in using the ordinary Simpson's Rules the First Rule gave arithmetical results which were nearer the truth than the Second Rule. If intending operators by Tchebycheff's Rules followed his suggestion and confined themselves to the First and Second Rules, they might ascertain whether better arithmetical results were obtained by taking the First Rule than by the Second; and perhaps in time information might be acquired on this matter which the Institution might be glad to have.

Mr Frank P. Purvis.

Mr CAIRD—The 7 ordinates in every case gave closer results than the 9.

Mr FRANK P. PURVIS (Member) said he was very pleased at the light that Mr Luke had thrown upon the paper. Mr Luke's valuable suggestions had not occurred to him, and he thought that Prof. Biles would admit the force of them. In the examples given by Prof. Biles and by Mr Caird, the accuracy of Tchebycheff's Method had been tested against other usual Methods. He (Mr Purvis) had tested the accuracy on curves of which one could deduce the areas mathematically, and the results he had obtained certainly surprised him. Taking the common parabola all the Rules, even the 2 ordinate One, seemed to apply with absolute accuracy; and their application to the volume of a sphere had rather astonished him. Plotting out the sectional areas of a sphere the line through the top of the ordinates was a common parabola, a point he did not remember having observed before, so that (in the case of the 2 ordinate Rule) the area of a single circle correctly placed was sufficient to give the exact volume of the sphere, to a degree of accuracy corresponding to the number of digits in the formula. To the parabola of the fourth order the Rules seemed to apply also with a high degree of accuracy, at least all but those for 1 and 2 ordinates. But for a circle or complete semicircle, which was a very crucial test of the accuracy of any rule, they were not so satisfactory. He found that, in using the 2 ordinate Rule in a circle there was an error of 4 per cent., and in the 9 ordinate Rule an error of about $\frac{1}{3}$ per cent. For the practical use of the Rules he thought he could endorse Mr Luke's views, and he quite agreed with Prof. Biles in the advantage he pointed out; "That the simple addition of the Tchebycheff Method enables one to continually run the integrator round the sections from forward to aft and take only the final readings." In the application to stability purposes may not improbably be found one of the highest values of these Rules. Any one who had used the integrator to a large extent knew the worry of having to continually stop at the end of running the point round each single section, and if a

number of sections could be grouped so that readings would only be required after running round the whole group, the worry and the work would be both greatly diminished. There was one point he thought rather humiliating in connection with the paper. Prof Biles referred back to a French paper which was not very new, its date being 1880, so that the French had this subject under consideration eighteen years ago ; and he understood that the Germans or Austrians were at it even earlier; viz, twenty-four years ago. The moral seemed to be that while they on the Clyde were very anxious to find out what others in the locality were doing, they did not trouble themselves very much about what people were doing abroad.

Mr JAMES R. JACK (Member) considered that it was difficult to make a fair comparison of this Method with others, as Prof. Biles had not expressed a mathematical proof of it. The examples tabulated appeared to be in close agreement, and as had been pointed out more accurate results were obtained with a small number of ordinates. It seemed to him that the accuracy of those results was more due to chance than to anything else. With Simpson's Rules any desired accuracy could be achieved by increasing the number of ordinates, but with Tchebycheff's it was rather the other way about. There was a certain maximum that gave the greatest accuracy, and increasing the number of ordinates seemed to diminish accuracy. Perhaps with the midship section it was most difficult to get exact results. Several shipbuilders were in the habit of calculating the area of midship section by measuring the area between the lowest three ordinates by planimeter, and working back by Simpson's First Rule to the first ordinate. In the figures quoted by Mr Caird, the vertical centres of buoyancy seemed to harmonise very well, while the longitudinal ones appeared to differ, but if these quantities were expressed as ratios to the draught and length respectively, he did not think that the differences would be very great. The excessive length dimension would certainly make the longitudinal error appear absolutely greater. With regard to the higher Simpson's Rules and their application, he thought the reason that they were not adopted was not because

Mr James R. Jack.

of their cumbrous nature so much as that no ordinary ship curve corresponded with the higher figures. Even a cubic parabola required the use of 4 ordinates, and in a great many ship curves 4 ordinates would not comply with the equations to those curves, whereas, with the First Rule only 3 ordinates were required; and if the ship curve itself was not a true parabola, there was always a possible parabola which would pass through the ends of the given ordinates, and its area would correspond closely to that of the ship curve in question. With regard to the statement that the curve of areas of a sphere was a parabola, he thought that was almost self-evident, as the square of the radius of the section of the sphere at any given x value was equal to a constant, minus x^2; and the area of the section (and consequently also the ordinate of the curve of areas) was proportional to that. He thought the reason why Tchebycheff's Method had not been taken up sooner was because they did not require it. Simpson's Rules were so much more accurate than the Trapezoidal Rule, which their neighbours across the channel had been using, that the need for a better rule did not appeal to them, but if Tchebycheff's Rules were going to be more useful he had no doubt that the utilitarian spirit of the Clyde would rise to the occasion.

The discussion on this paper was resumed on 21st February, 1899.

Mr ROBERT T. NAPIER (Member) said that following what Mr Purvis had stated at the last meeting he had tested Tchebycheff's Rule on some geometrical figures, the area of which could be calculated exactly. He had tried a segment of a circle, a semi-ellipse, a parabola, and a compound figure, each with a base at least 24 inches long. He found that with the ellipse Tchebycheff's Method, taking nine ordinates, gave a very good result, while with Simpson's Rule, with ten intervals, the result was $1\frac{1}{2}$ per cent. wrong. With the parabola Simpson's Rule naturally gave a practically exact result, while Tchebycheff showed 2 per cent. error. With the segment of a circle and the compound figure Tchebycheff's Method showed slightly worse than Simpson's, but both of them gave very good results. At the present moment there was no appeal from Simpson's

Rule in most drawing offices, but by the judicious use of the planimeter errors of observation cancelled each other and an accurate result could be obtained. One practical objection to using Tchebycheff's Rule in the drawing office was that almost all shipbuilders raised the lines of vessels with sections at equal intervals, and he did not think they would be likely to depart from the simplicity of this system and adopt irregular intervals. Having sections at regular intervals, it certainly was simpler to take the displacement from them, than to make a special set of sections for the purpose.

Professor A. BARR (Member) observed that he did not presume to discuss this matter from the special point of view of the naval architect, but all engineers were interested in rules or formulæ that would give a close approximation to the area of a curve not obtainable by direct mathematical integration. Simpson's First Rule was one of the simplest of these, and it was probably the one most generally adopted. As was well known it gave a perfectly accurate result for an area bounded by a common parabola, but it might be of interest to the members to have an independent proof

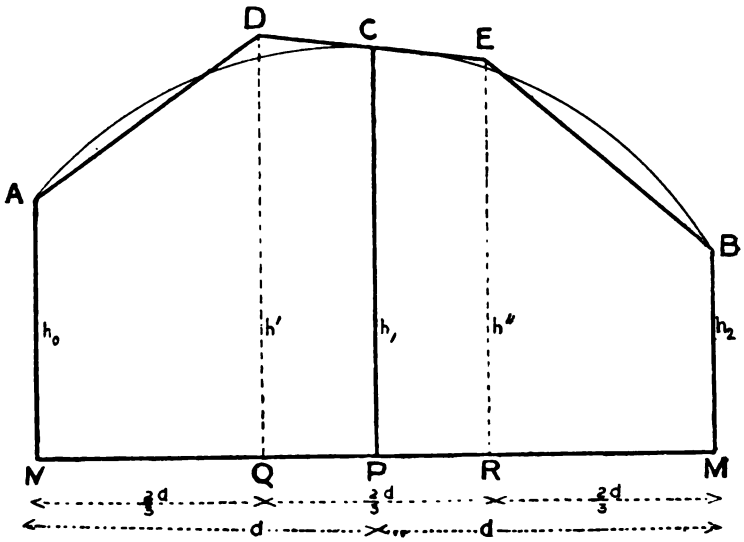

Fig. 7.

or illustration of its approximate truth for other fair curves. Let an area, A B M N (Fig. 7), be divided into two bands of equal breadth by an ordinate P C, and again into three bands of equal breadth by ordinates Q D and R E. Draw the tangent to the curve at C, meeting the ordinates Q D and R E in D and E respectively. Join A D and E B. It would be seen that the area of the polygon, A D E B M N, was a close approximation to the area of the curved figure A C B M N.

The area of the polygon was—

$$\left(\frac{h_0}{2} + h' + h'' + \frac{h_2}{2}\right)\frac{2}{3}d$$
$$= \left(h_0 + 2\,(h' + h'') + h_2\right)\frac{d}{3}$$
$$= \left(h_0 + 4\,h_1 + h_2\right)\frac{d}{3}$$

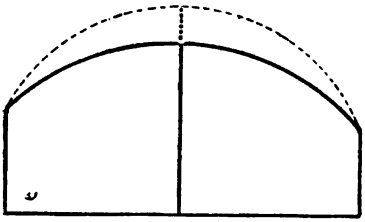

Fig. 8.

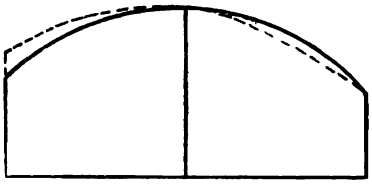

Fig. 9.

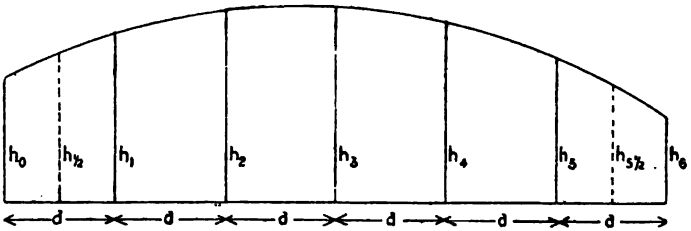

Fig. 10.

This was Simpson's Rule for an area of two bands. In this expression the importance given to the middle ordinate was four times that accorded to each of the end ordinates, which was reasonable, since—as would be seen from Figs. 8 and 9—any change in the length of the middle ordinate affected the area much more than a corresponding change in the length of one of the end ordinates, so long as the curve was fair and not altered in general character.

For an area divided into any even number of bands—say 6—Simpson's First Rule was applied by adding the expressions for the areas of portions each of which comprised two bands. Thus, for 6 bands the formula was:—

$$\text{Area} = \left(h_0 + 4\,h_1 + 2\,h_2 + 4\,h_3 + 2\,h_4 + 4\,h_5 + h_6\right)\frac{d}{3}$$

But when the number of ordinates was considerable, there was no good reason why greater importance should be given to one ordinate than to its neighbours in the central portion of the area, as was done in Simpson's Formula, where the coefficients were 4 and 2 alternately. Starting from this consideration the late Prof. James Thomson—in January 1874, and at subsequent dates—devised several formulæ in which equal weight was given to all the ordinates except those near the ends. He would only refer at present to one of these, the simplest one, which might be called Thomson's First Rule. The rule was more rational than Simpson's in the sense referred to, and—in many cases—less laborious to use. Like Simpson's Rule, it was perfectly true for an area bounded by a parabola. It was derived in the following manner:—Divide the area into any even number of bands, say six, and bisect each end band as shown in Fig. 10. Then, by Simpson's Rule:—

$$\text{Area} = \left(h_0 + 4\,h_1 + 2\,h_2 + 4\,h_3 + 2\,h_4 + 4\,h_5 + h_6\right)\frac{d}{3}$$

$$\text{Also area} = \left\{\begin{array}{ll} \dfrac{h_0 + 4\,h_{\frac{1}{2}} + h_1}{2} & \dfrac{h_5 + 4\,h_{5\frac{1}{2}} + h_6}{2} \\ + h_1 + 4\,h_2 + 2\,h_3 + 4\,h_4 + h_5 & \end{array}\right\}\frac{d}{3}$$

Adding these expressions and dividing by 2, then—

$$\text{Area} = \left(\frac{1\frac{1}{2}\,h_0}{6} + \frac{2\,h_{\frac{1}{2}}}{6} + \frac{5\frac{1}{2}\,h_1}{6} + \frac{6\,h_2}{6} + \frac{6\,h_3}{6} + \frac{6\,h_4}{6} + \frac{5\frac{1}{2}\,h_5}{6} + \frac{2\,h_{5\frac{1}{2}}}{6} + \frac{1\frac{1}{2}\,h_6}{6}\right)d$$

$$= \left(\tfrac{1}{4}\,h_0 + \tfrac{1}{3}\,h_{\frac{1}{2}} + (1 - \tfrac{1}{12})\,h_1 + h_2 + h_3 + h_4 + (1 - \tfrac{1}{12})\,h_5 + \tfrac{1}{3}\,h_{5\frac{1}{2}} + \tfrac{1}{4}\,h_6\right)d$$

It would be seen that, in this Rule, there were easy multipliers for the 3 ordinates at each end of the curve, and that all the other ordinates had unity as the coefficient. The formula would give a very good approximation to the area whether the number of bands was even or odd, provided that the number was considerable. It seemed to him that Thomson's Rule would be simpler to work in ship calculations than Tchebycheff's, since no doubt naval architects

would in any case continue to use equi-distant sections in designing ship forms, and consequently the sections required by Thomson's Rule (except possibly the half-space ones) would be already drawn, whereas special sections were required for the application of Tchebycheff's Formula. The Rule had also, in a considerable degree, the advantage referred to by Prof. Biles in the second last paragraph of his paper, p. 188, inasmuch as the sum of all the central sections could be taken cumulatively by a mechanical integrator. Thomson's Rule had, so far as he knew, never been published, but he presumed that the oral demonstration of the rule to the engineering classes in the University constituted a sufficient publication to establish a claim to priority on behalf of Dr. Thomson, should it have been independently proposed by any other person during the last twenty-five years. He (Prof. Barr) was indebted to Mr James Thomson, of Newcastle, for his kindness in lending him Dr. Thomson's notes, from which he had confirmed his recollection of the formula.

The CHAIRMAN (Mr Robert Caird, Vice-President) said that Radau, in a most exhaustive paper on the numerical value of definite integrals (referred to by Prof. Biles), had analytically treated all the known formulæ of quadratures, and given approximate values of an extremely general integral calculated according to those formulæ, with their errors to the eighth decimal place, and classified in terms of what he called "the degree of precision." Kriloff had pointed out that, of these, there were three representative general formulæ—those of Gauss, Cotes, and Tchebycheff—Simpson's being only a particular case of Cotes'. Taking them in their order, Gauss' required separate coefficients for ordinates and abscissæ; Cotes', taking equidistant ordinates, required only coefficients for the ordinates; while Tchebycheff's, making the ordinate-coefficients constant, required only the coefficients of the abscissæ to be calculated. Looking at Tchebycheff's and Simpson's Rules, the maximum degree of precision was attained, in the first, when the number of ordinates taken equalled the highest power in the expansion of the function in a finite series, whereas, in Simpson's, it was attained with one more. Therefore,

for a fair comparison between the two, each rule should be applied on its own proper conditions, and not as they had been doing, in view of the least work in practice. For example, in the case of an area limited by a parabola of the second order, Simpson's Rule with three ordinates should be compared with Tchebycheff's with two. Under these circumstances, both would give absolutely accurate results. Mr Napier said that, in testing a parabola, he found the rule was approximately true, but, if he had applied it to a true parabola of a known equation, Tchebycheff's and Simpson's Methods would have given absolutely correct results. Taking a parabola of the third order, Tchebycheff required three, and Simpson four ordinates for maximum precision, using, of course, Simpson's Second Rule. If an expansion were taken having powers higher than those upon which the formulæ were based, an error was introduced, but it was limited to the evaluation of the terms constituting the remainder. It might be useful to prove Tchebycheff's Rule in the manner usually employed for Simpson's in text-books, such as, for instance, Thearles' :—

Take $y = a + b\,x + c\,x^2$ as the equation of the curve, with the origin O midway between the limits. Let h = Simpson's abscissa—then $\frac{h}{\sqrt{3}}$ = Tchebycheff's abscissa for two ordinates.

$$\text{When } x = -\frac{h}{\sqrt{3}},\ y_1 = a - b\,\frac{h}{\sqrt{3}} + c\,\frac{h^2}{3}$$

$$\text{,, } x = +\frac{h}{\sqrt{3}},\ y_2 = a + b\,\frac{h}{\sqrt{3}} + c\,\frac{h^2}{3}$$

$$\text{By Tchebycheff: Area} = \frac{2h}{2}\,(y_1 + y_2)$$

$$= h\left(a - b\,\frac{h}{\sqrt{3}} + c\,\frac{h^2}{3} + a + b\,\frac{h}{\sqrt{3}} + c\,\frac{h^2}{3}\right)$$

$$= h\left(2\,a + 2\,c\,\frac{h^2}{3}\right)$$

$$= \frac{2h}{3}\,(3\,a + c\,h^2)$$

$$= \int_{-h}^{h} (a + b\,x + c\,x^2)\,d\,x.$$

Mr Robert Caird.

So that Tchebycheff's Rule was rigorously exact for parabolic curves of this order. When he was dealing with this rule at the last discussion, he thought it was only an interesting curiosity, but he confessed that he had been entirely converted. He thought now that the rule might be used in very many cases to great advantage, and he found that in some cases it was much shorter than Simpson's. He took, for instance, a curve of half areas, and calculated its area in three ways—by Simpson's with 15 ordinates (10 divisions and 4 sub-divisons), by Tchebycheff's with 15 ordinates, and by planimeter. With Tchebycheff's he took the 15 ordinates in series of three. In that way he used only one co-efficient, and it would be seen that that made a very short calculation indeed. He thought it was Mr Luke who had suggested that a saving in labour might be effected by using only the co-efficients for either 3 or 2 ordinates. If they divided the base of their curve into equal divisions, and applied the 3-ordinate co-efficient for Tchebycheff's abscissae; viz., $\frac{1}{\sqrt{2}}$, they could take each portion by itself, find its area by Tchebycheff's Rule, and, by simple summation of these partial areas, get the area of the whole figure. The following were the comparative results so obtained :—

By Simpson's Rule, with 15 Ordinates (10 Divisions and 4 Sub-Divisions)	Displacement = 5534 tons.
By Tchebycheff's Rule, with 15 Ordinates (3 repeated 5 times)	" = 5530 "
By Planimeter,	" = 5560 "

Correspondence.

Mr J. Rennie Barnett (Member)—Observed that this method might be good, but unfortunately from the little they had heard about it, the impression left was that it was not so good as the other methods at present in use. However, it was certainly absurd to think of trying to find the area of almost any curve met with in ship designing, by using 2, 3, or 4 ordinates only, either by Tchebycheff's or any other method, however excellent it might be.

Yet both Prof. Biles and Mr Caird had given examples of that sort. Mr Ruskin long ago had shown that any number of curves could be drawn through the same spots when there were only 3 to cut. One thing seemed pretty certain, there was no saving of time by adopting this method, and that was perhaps the chief point next to accuracy in determining its practical use. If any time were saved by its use at one point, it was lost elsewhere. Then again, the method of continually running round the sections from forward to aft, and thereby taking only the final reading, was applicable, in many cases, both to Simpson's and the Trapezoidal Rules. It was interesting to learn from Mr Purvis that the French knew of Tchebycheff's Method eighteen years ago—they were always ahead of us in these things—but surely it was very significant that after knowing it all that time, they still preferred the Trapezoidal Rule. What would seem to him the best use perhaps to put this method to was in working backwards, as it were—constructing, say, a curve of sectional areas—one could approximate to the curve wanted with comparatively few ordinates.

Mr W. Hök, Sunderland—Considered the Institution was greatly indebted to Prof. Biles for drawing attention to the system of M. Tchebycheff. As far as he knew, no other method of corresponding simplicity equalled or exceeded this method in accuracy. Judging by the calculated results embodied in the paper, this method appeared to give results within 1 per cent. of actual values, at all events as regarded areas and volumes. In connection with this matter, he would like to ask Prof. Biles to state in his reply if both the horizontal and vertical integration were obtained with the integrator in the examples given in his paper, if so, assuming the integrator and drawings absolutely accurate and the integration done with great care, the accuracy of M. Tchebycheff's Method should be judged by the results obtained with the integrator and not by the standard of Simpson's Rule. Then Tchebycheff's Rule appeared fully as accurate as Simpson's Rule, and was under certain conditions infinitely simpler. During the last fortnight he had calculated numerous waterlines for vessels ·45, ·65, and ·80 in fineness; and

within this wide range the accuracy obtained was truly remarkable, and equal to that obtained by Prof. Biles. The great objections to this method, as far as this country was concerned, were that the sections and waterlines had to be spaced differently to custom, involving work that only skilled ships' draughtsmen could do, and that to obtain a complete displacement curve the vertical integration had to be repeated for every spot required. Regarding the actual time necessary for making the single integration of a waterline or a section by Tchebycheff's Method, it was very much shorter than that required for Simpson's Rules, and he thought the accuracy of the two rules was in almost all cases equal—probably Tchebycheff's Method with 5 ordinates was as accurate as Simpson's Method with 10 ordinates, Tchebycheff's with 7 ordinates equal to Simpson's with 14 ordinates, and so on—and when a double integration was required, as in the case of obtaining a volume, drawing new sections (assuming the ordinary sheer draught available) and performing as many calculations similar to that on page 182 of Prof. Biles' paper, as spots were required for the displacement curve, would not occupy any more time than calculating the displacement curve by Simpson's Rule. But in any case the gain by adopting Tchebycheff's Formula in this instance would be so very small, if any at all, that he thought it was not worth while making the change. But the method could be used on many occasions when for rapidity Simpson's Rule had no chance against it. The designer of lines might, for instance, space his rough preliminary sections according to Tchebycheff's Formula, and calculate his displacement to the load draught by the process shown in page 182, in next to no time. This was of great advantage as every designer knew who had to fine or fill out his sections and go on calculating the displacement until he hit upon the right one. He could think of another advantage. One might wish to know the displacement and fineness of a certain ships' model; and no method could be simpler to use in such a case than that of M. Tchebycheff. To mark off the positions of the sections in their proper places along the keel, make five or perhaps seven moulds

so as to obtain the form of the model at these places, transfer the sections to a sheet of paper and calculate as per page 182 was not one-quarter the work required as if Simpson's Rules were used, for by Tchebycheff's Formula they had only one-half the number of sections and no multipliers whatever. Tchebycheff's Method could always be used with great advantage whenever the question resolved itself into calculating the whole of an area pure and simple. He concluded by thanking Professor Biles for having drawn the attention of the shipbuilding community of this country to M. Tchebycheff's remarkable Method in this interesting and valuable paper.

Professor J. H. BILES in reply said he was exceedingly gratified that his paper had excited so much curiosity and interest. This subject of Tchebycheff's Formula was only one small part of a very wide theme, which had excited from time to time almost as much interest as the Dreyfus Affaire. It was the great subject of quadrature which had brought forward a great many rules. That night Prof. Barr had drawn attention to an interesting rule which he did not remember of having seen before. There were one or two modifications of Simpson's Rule which led to similar results where, as in the case given by Prof. Barr, the great bulk of the ordinates in the centre might be multiplied by 1. Some possessed the drawback that the end ordinates had to be manipulated in a special fashion, but they all led to equally satisfactory results with Simpson's Rule. With regard to the Rule known as the $\frac{5}{8}$ Rule, the first ordinate was multiplied by 5, the second by 8, the third by 1, and the sum by $\frac{1}{12}$ of the interval, which gave the area between the first two ordinates. Applying this Rule in succession to get the whole area of a figure bounded by a curve defined by a number of ordinates, a rule similar to that brought forward by Prof. Barr would obtain. Some of these rules were very interesting, but practically speaking the only one that had stood the test of time, and had become generally used in making calculations, was Simpson's Rule; and this Formula of

Prof. J. H. Biles.

Tchebycheff's was, he ventured to think, a rule that in some cases might be used in preference to Simpson's Rule. It had a high degree of accuracy, and in some cases could be employed with less work. He did not mean to say that it could be employed in every case with less work, but he thought if it were kept in view by those who were constantly using Simpson's Rule, they would save themselves a great deal of trouble. He was no worshipper of this particular Formula, but he thought that it could be made useful, and he did not think they need throw over Simpson's Rule because they had discovered this one. He had no opportunity of correcting the paper after it was printed, and he would thank Mr Caird for making one or two small corrections. With regard to the statement "that with 8 ordinates there was no practical rule," what he intended to convey was that there was no practical method of finding the area with 8 ordinates by Tchebycheff's Method. The solution of the mathematical problem led to imaginary multipliers which were not very useful to handle. The correction of the term "the whole length of the curve" to "the length of the base of the curve" was one which ought to have been made, and he hoped that Mr Caird when he spoke of the length of a ship did not mean the length round the keel or the water line; but it was a proper correction to make. One point of real importance was the question of finding the longitudinal centre of buoyancy. The calculations which he had made showed that by Tchebycheff's Rule the longitudinal position was very different from what it was by Simpson's. As Mr Jack had pointed out, the error might not be a large percentage error because it was taken from the middle of the ship and not in proportion to the whole length of the ship. If, instead of using seven ordinates in integration by Tchebycheff, two blocks of four at each end were used he thought they might then have a more accurate result. The figure pointed out by Mr Luke as being incorrect in Table C for four ordinates, should have been ·8396 and not ·8896, so that the results were more consistent than appeared in the paper. Mr Luke put a very pertinent question which he would not answer, but would state some figures and allow him to decide for

himself. His question was, "Did Prof. Biles intend it to be understood that with 7 ordinates longitudinally as good work could be accomplished as with 17 taken by the ordinary Simpson's Rule?" He had worked out results taking 7 ordinates longitudinally and 5 vertically by Simpson's Rule, and the final figure was 1123·7, while with 17 longitudinally and 7 vertically it was 1137·6. With Tchebycheff's Formula, taking 7 ordinates longitudinally and 5 vertically the result was 1142·9, and the integrator gave 1141·4, so that with 17 longitudinally and 7 vertically by Simpson's Rule the result was not so close as with 7 longitudinally and 5 vertically by Tchebycheff's; and with 7 longitudinally and 5 vertically by Simpson's it was still further away than it was with the 17 longitudinally and 7 vertically, so that Mr Luke might decide for himself whether on the basis of one case the rule was more accurate, or whether with 7 ordinates longitudinally as good work could be accomplished as with 17 taken by the ordinary Simpson's Rule. He thought the real point was, that this rule was one which required testing in a great many cases before one could be sure of its general application. He did not like to say that it was one that could be absolutely and finally trusted under all circumstances, because he had tried it on so few cases himself, but when it was better known a body of authoritative opinion would be obtained. Mr Luke observed that "The best way to arrive at the number of ordinates necessary for the practical integration of a curve was to consider the number that was deemed sufficient to faithfully reproduce the curve graphically, then that would be a satisfactory number of ordinates by which to approximate to its area." It might be so generally, but he was not sure that it was so always. If they had a batten so shaped that it would bend into a common parabola, the degree of accuracy that could be obtained by having three spots would be quite as great as with 300 spots; and although that was rather an extravagant illustration, it enforced what he meant by showing that the degree of accuracy depended upon the apparatus with which the curve was set off. Mr Luke had pointed out that the application of Tchebycheff's Rule would be found most useful

by taking 3 ordinates and piling them up, so to speak, in blocks of 3. He had accepted the suggestion of Mr Luke and tried the continuation by 3 ordinates at a time. In the case of a form referred to in the paper, that had been done with the following results:—

S. S. 270′ × 35′.

	ORDINATES.	DISPLACEMENTS.
Simpson's Rule, -	17 longl. & 3 vertical	254 tons to 3′ W.L.
	17 „ & 5 „	659·4 „ 6′ W.L.
	17 „ & 7 „	1137·6 „ 9′ W.L.
Tchebycheff's Rule,	7 longitudinal and	254·4 „ 3′ W.L.
	taken in 3 blocks	664·0 „ 6′ W.L.
	vertically - - -	1137·0 „ 9′ W.L.

	ORDINATES.	DISPLACEMENT AT 9 FEET DRAUGHT.
Simpson's Rule, -	7 longl. & 5 vertical	- 1,123·7 tons.
Simpson's Rule, -	17 „ & 7 „	- 1,137·6 „
Tchebycheff's Rule,	7 „ & 5 „	- 1,142·9 „
Integrator, - - -	17 longitudinal -	- 1,141·4 „

Note.—The figures for Simpson's Rule were taken from curves drawn to the calculated volumes at other waterlines. Those for Tchebycheff's Formula were actually worked out.

When Tchebycheff's Third Rule was used in the manner proposed by Mr Luke, it gave in some cases very accurate results, and was certainly worth trying. It permitted of the displacement being acquired at a series of waterlines, as with Simpson's Rule, and removed one of the objections that had been urged against the application of Tchebycheff's Method to 7 or 9 ordinates, so that it could be used for intermediate positions. Mr Purvis's remarks on the testing of the Rule by applying it to a parabola had been already dealt with by one or two speakers. Mr Jack's remarks were

perhaps rather hastily made, but when he had read the paper through again he would no doubt see that the subject was worth a little careful consideration. Mr Jack seemed to think that the accuracy of some of the results was due to accident more than anything else, but that could hardly be true, when so many had considered the matter intelligently and had come to the conclusion that the method possessed a considerable degree of accuracy. A few days ago Mr Luke had shown him a case in which he had tried the method on a parabola of the 7th order, and he found that the error in calculating the area was only $\frac{2}{3}$ of the error by calculating it with Simpson's First Rule. That, certainly, was not a matter of accident. There was one other point which Mr Jack mentioned, but, on a little reflection, he would see that it was not quite correct. He said—"Even a cubic parabola required the use of 4 ordinates, and in a great many ship curves 4 ordinates would not comply with the equations to those curves, whereas with the First Rule only 3 ordinates were required; and, if the ship curve itself was not a true parabola, there was always a possible parabola which would pass through the ends of the given ordinates, and its area would correspond closely to that of the ship curve in question." Naturally, that assumed that ship curves were more like common parabolas than cubic parabolas, and he was never aware before that ship curves corresponded more nearly to the former than the latter. Mr Jack considered "The reason why Tchebycheff's Method had not been taken up sooner was because they did not require it," but that objection might be taken to a great many other things. The telephone was not taken up sooner because it was not required, but, when it was got, people found that they did require it. A question had been asked by Mr Hök as to whether both the horizontal and vertical integrations were obtained with the integrator in the examples given in his paper, and he had to answer in the affirmative. He could not see that anything Mr Barnett had said would seriously alter his opinion on the question of the possible value of Tchebycheff's Formula. One of the difficulties suggested in connection with the use of the Formula was that the multipliers

were rather cumbrous to handle. He had prepared a diagram, Fig. 11, in which the abscissæ represented values for the half-length of ships, and the vertical ordinates multipliers, so that by reading off the half-length of the ship along the base, the actual length of the spacing of the ordinates could be read off at once without multiplying.

The CHAIRMAN moved that Prof. Biles be awarded a vote of thanks for his paper. He considered it was one of the best tests of a paper that it brought out sufficient discussion. Another good test was that if it set men thinking, and if, when they got on the line of the work suggested, they obtained valuable results; and on this occasion that had been so in a marked degree.

The vote of thanks was heartily accorded.

M. TCHEBYCHEFF'S FORMULA

Fig. II.

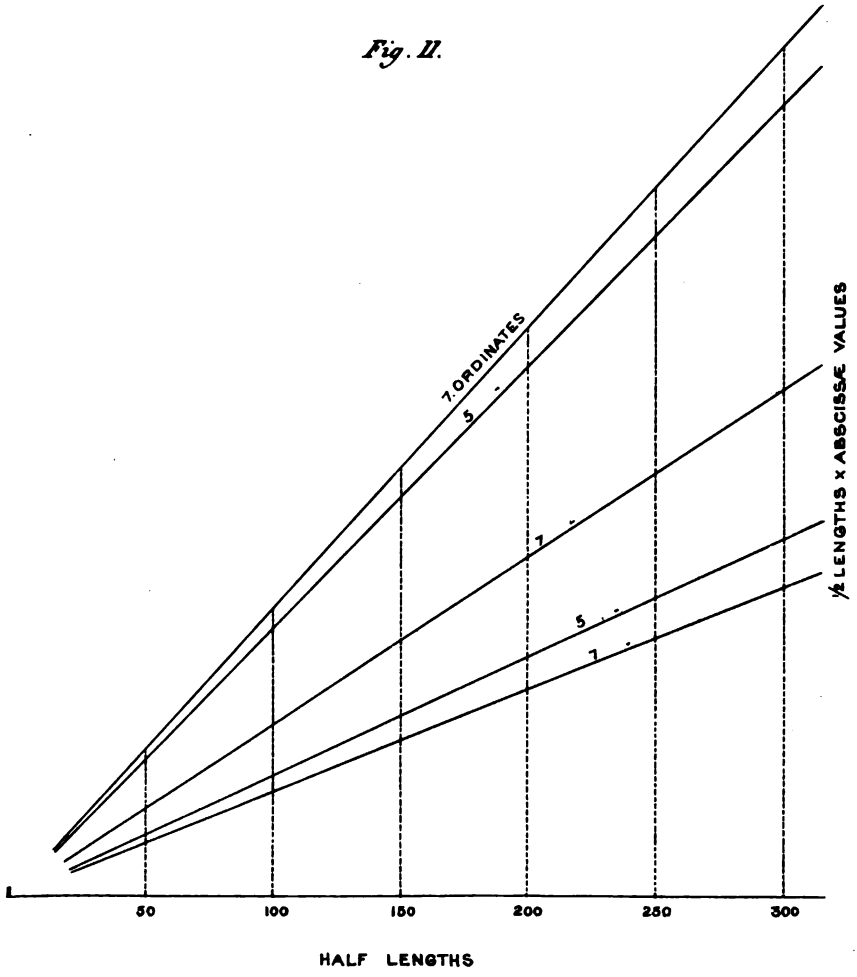

Proceedings Institution of Engineers & Shipbuilders in Scotland (Incorporated.) Vol XLII.

ROBERT GARDNER & Co
ENGINEERING LITHOGRAPHERS. GLASGOW

To face page 212.

EXAMPLES OF FOUR-CRANK ENGINES, AND THEIR AUXILIARIES.

By Mr JOHN THOM (Member).

(SEE PLATES IX. AND X.)

Read 24th January, 1899.

FOUR-CRANK ENGINES, being better adapted for quick running and large power than the three-crank type, are now coming into more general use in both small and large vessels. Having lately been engaged in the design and construction of upwards of twenty sets of four-crank engines, I propose, in this paper, to give a description of the principal features of them and their auxiliaries.

Figs. 1 and 2 show sectional and end elevations of a set of four-crank engines, made by Messrs Muir & Houston, Ltd., capable of developing over 600 I.H.P.

In order to reduce the length, so that they might occupy the same space as the equivalent three-crank engines, they were fitted with the "Parole" type of piston and slide-valves; these valves were designed so that one piston or slide-valve could regulate the steam to two cylinders. This arrangement reduces the valve-gear to two sets with four eccentrics, instead of four sets of gear with eight eccentrics.

In all the above-mentioned engines, the two forward cranks are placed diametrically opposite each other, and the two after-cranks in the same relative position to each other, but at right angles to the two forward ones. This, by experience, was found to be the best arrangement for reducing vibration; and when the pistons working

in opposite directions were made the same weight, it was found that no other precaution was necessary to produce a smooth-running engine. This arrangement of cranks was also necessary for the steam distribution by the "Parole" type of valves, as will be understood by reference to Fig. 1, and the detailed sketches of the valves, Figs. 3 and 4.

Fig. 3 shows the piston-valve for distributing the steam to the H.P. and I.P. cylinders. It is divided in the centre, and the two parts are rigidly bolted together; the H.P. face has inside lap. The steam is admitted from the main steam-pipe to the inside of the valve, through the centre port A in the H.P. cylinder, and is exhausted from this cylinder at the outer edges of the valve into the valve-casing. The I.P. face has outside lap, and the exhaust steam from the H.P. cylinder is admitted direct from the casing to the I.P. cylinder. It then exhausts from the I.P. cylinder in the usual manner, through the port B to the L.P. casing, by the pipe at the back of the engines, Fig. 2, this being the only pipe connection on the main engines beside the main steam- and exhaust-pipes.

The high and intermediate cylinders are bolted together at the centre of the valve-casing, which is bored out to receive the liner for the piston-valve to work in. This liner has no ports at the sides, so that if the piston-valve is too easy a fit, it can be lined up to the faces by inserting a sheet of tin between the two parts of the valve.

Fig. 4 shows the slide-valves for distributing the steam to the two L.P. cylinders. The valves are not bolted rigidly together like the H.P. and I.P. ones, but are made self-adjusting, since it is more important to have them perfectly steam-tight. This adjustment is attained by casting a circular projection on the back of each valve, causing the one to slide inside the other, thus forming an expansion- or slip-joint, which is kept steam-tight by two Ramsbottom rings, C, as shown in the left-hand view. When there is no pressure in the casing, the valves are kept up to the faces, by four spiral springs fitted into the bosses at the corners of the valves, as shown at D in the right-hand view, which is the back view of the after L.P. valve.

This slip-joint forms a perfect pressure-relief ring, since it only

leaves the corners of the valves exposed to the receiver pressure, which, with the assistance of the four springs, is just sufficient to press the valves properly on to their working faces.

The after L.P. valve has lap inside on the steam admission edges, while the forward L.P. valve has lap on the outside. The steam is admitted from the L.P. casing through the sides of the valves, no admission port corresponding to port A in the H.P. cylinder being necessary. Only one exhaust-port and one exhaust-pipe are required for the two L.P. cylinders; the after L.P. cylinder, as shown in Figs. 1 and 2, has no exhaust-port, the exhaust steam from that cylinder passes through the body of the valves into the exhaust-port of the forward L.P. cylinder, and thence by the single exhaust-pipe to the condenser. These valves, as indicated by the left-hand view, Fig. 4, are connected to the valve-spindle, in the same manner as a locomotive slide-valve, by a band passing round the cylindrical projections on their backs. In a larger set of twin-screw engines, of 3500 I.H.P., made by the Fairfield Shipbuilding and Engineering Co., Ltd., two spindles were used, one passing through each valve, the two being connected by means of a T piece on the valve-spindle; each spindle was thus kept clear of the slip-joint.

The reversal of laps on the H.P., I.P., and L.P. valves is, of course, necessary to give the reverse action to the pistons.

If, for instance, the L.P. valves are at the top of their stroke, steam will be admitted to the top end of the after L.P. cylinder, and at the same time to the bottom end of the forward L.P. cylinder. A similar action will take place with the reversed exhaust-ports, the steam exhausting simultaneously from the bottom of the after L.P. cylinder and the top of the forward L.P. cylinder.

These engines were originally made with a feed-heater in the exhaust-pipe (shown partly in section in Fig. 2), and with the main feed-pump driven in the usual manner from the air-pump levers. A Lamont's patent simplex pump was used as a stand-by feed donkey. As this latter pump, working at fifteen strokes per minute, had a much less injurious effect on the feed-check valves than the main feed-pump, with the engines running up to 166 revolutions

per minute, the pump was taken off the engines, and the arrangement of heater and pumps, shown diagrammatically in Fig. 5, was finally adopted. Here the air-pump and heater-pump are driven by levers from the H.P. crosshead. The air-pump discharges the water into the hot-well in the usual manner, from whence it is drawn through the feed-regulator (placed on the hot-well discharge-pipe to prevent air being drawn into the condenser, in event of the discharge-pipe getting empty of water) to the heater in the main exhaust-pipe, into which it is sprayed. It then mixes with the exhaust steam, from which it is separated, on passing through the heater, by the centrifugal action set up by the spiral arrangement, and caught in the pocket at the bottom of the heater. From this it is drawn by the heater-pump, and discharged to the float-tank, from which the feed-pump then draws it in the usual manner. This arrangement accomplishes three things—it raises the temperature of the feed between the hot-well and the float-tank 44° Fah.; increases the vacuum; and keeps oil out of the condenser.

Referring again to Figs. 1 and 2, it will be noticed that the receiver volumes are necessarily small, and, as might be expected, the indicator diagrams Fig. 6 (which are from the starboard engine of the 3500 I.H.P. set) are somewhat different in form from those which would be obtained from an engine with large receivers, in which instance the receiver pressure would be more uniform.

It is generally conceded that the friction at the main bearings of the three-crank engine is less in proportion than that of the two-crank compound, and it may be assumed that the friction at the bearings of the four-crank engine is proportionately less than that of the three-crank triple engine.

In the case of the four-crank triple-expansion engine, however, the powers developed in the L.P. cylinders vary very much with the speed. At low speed, the power developed in each L.P. cylinder may be only half that developed in the H.P. or I.P. cylinder, while at full speed it may be equal to them. In order to get the full advantage of the reduction of friction at the bearings, the two L.P. cylinders should be placed together.

The following table gives the results from three different sets of four-crank engines :—

ENGINE.	Steam.	Vacuum	Revolutions.	Piston Speed.	CYLINDERS.				
					DIAMETER.				STROKE.
					H.P.	I.P.	F.L.P.	A.L.P.	
A	170	26″	166	581	13″	22″	23½″	23½″	21″
B	160	25″	176	792	20½″	34″	37″	37″	27″
C	180	25″	130	455	13″	22″	23½″	23½″	21″

ENGINE.	INDICATED HORSE POWER.				
	H.P.	I.P.	F.L.P.	A.L.P.	TOTAL.
A	213	212	107	128	660·0
B	555.6	548·8	336·5	313·2	1754·1
C	142	183·5	64	65	454·5

Engine A is the one illustrated in Figs. 1 and 2; engine B is that for which the indicator diagrams, Fig. 6, are given; and engine C is a duplicate of engine A, with the exhaust feed-heater, but it has no air-pump fitted on it, independent air- and circulating-pumps being provided instead.

The boilers supplying steam to engines A and B work under forced draught, while the boiler supplying steam to engine C works under natural dranght.

The independent air- and circulating-pumps fitted in connection with engine C are shown on the left hand side of Fig. 7. The air-pump is placed in the centre, and one circulating-pump on each side of it; the three pumps are driven direct from the steam cylinder above.

On the right hand side of Fig. 7 are shown two of Lamont's

simplex feed-pumps and float-tank referred to in connection with engine A.

The chief feature of this pump is that the steam cylinder has double ports at each end, similar to those of a duplex pump, which enable it to reverse very quietly, owing to the compression of the steam at each end of the stroke. There is this difference, however, between its action and that of the duplex pump, that, if it happens to draw air, it will still complete its stroke, but the piston will not strike the ends of the cylinder.

As arranged in Fig. 7, one pump is used as the main feed-pump, and the other as a general donkey.

In the case of engines A and B, this pump was used to work the See's ash ejector, and gave satisfaction; but a duplex pump is more suitable for this purpose, as it gives a somewhat steadier flow of water.

The main feed-pump as shown has double exhaust-valves, one of which leads to the general auxiliary exhaust, while the other can be led direct to the suction-pipe of the pump, which can thus be made to act as a most efficient feed-heater.

With reference to the float-tank, the special feature here is the spiral spring which is substituted for the customary back balance weight. The spring is compressed to give the upward force equivalent to that of the balance weight, but, as the float rises, this force, owing to the release of the spring, decreases in greater proportion than that of the balance weight, so that on the reversal of motion, the action of the spring, at the top position, is tantamount to adding more weight to the float. A similar, but reverse, action takes place at the lower position of the float.

In the case of engine C, the independent air- and circulating-pumps are supplied with steam direct from the boiler, and exhaust to the condenser or L.P. casing. Since that arrangement was adopted, in connection with engine C, the superintending engineer of the Great-Northern Fishing Co.'s fleet has fitted a set of engines in one of these boats with independent air- and circulating-pumps; but, instead of taking steam from the boiler to drive these pumps,

as in the above instance, the feed-pump exhaust is used to drive them, and the exhaust is led from the air-pump cylinder to the suction-pipe of the feed-pump. The complete arrangement of these pumps and their pipe connections is shown in Fig. 7. It will be noticed also that, the float-tank controls all the auxiliaries. This installation has been working for twelve months, and the coal consumption compares very favourably with that of other vessels with the ordinary arrangement of air-pumps driven by levers on the main engines. He informs me that, when lying in dock, by throttling the sea inlet and keeping full steam on the pump—*i.e.*, only letting a little water into the pump at each stroke—he can pump direct from the sea to the boiler, with the water heated up to 160° Fah., by the donkey-pump exhaust. This independent system further insures a constant vacuum when starting and stopping the engines. There is no overflow of water at the air-pump discharge, and when the engines are stopped the winches can still exhaust into the condenser, thus saving a considerable quantity of water. The boiler can also be worked for a much longer period without being cleaned. It is at first difficult to conceive how the separate pumps should be as economical as those on the main engine, as individually each pump might take as much as five times the steam a pump on the main engine would take; but the combination makes the pump compound by the special connection, and then all the heat not used in doing useful work, or lost in friction or by radiation, is returned to the boilers. Further, the friction must be much less in a direct-acting pump working at twenty double strokes per minute than that of a pump working at, say, one hundred and twenty strokes.

Correspondence.

Mr James Weir (Member) observed that with reference to Mr Thom's description of the feed-heater in the exhaust-pipe, he had stated that it accomplished three things; viz., it raised the temperature of the feed, it increased the vacuum, and kept oil out of the

Mr James Weir.
condenser, but beyond the bald statement they were not furnished with any information which led them to consider that these effects were actually accomplished; for, according to the only evidence he produced to support his statement, the vacuum in the condenser was not increased by the application of the feed-heater, but the very reverse. From the table of results it would be seen that engine A without the feed-heater had 26 inches of vacuum, and engine C with the feed-heater had only 25. Mr Thom also claimed that this arrangement kept the oil out of the condenser, and on reference to his diagram it appeared that if the oil did not go to the condenser, the only other place it could go to was the boiler. As to any novelty in the feed-heater described, he noted that Mr Thom made no claim. In that he was wise, for it was similar to what had been fitted in a number of the old as well as the new Inman Line steamers, as Mr Thom would possibly remember. Indeed, it was practically what was known as the Paterson feed-heater, fitted by Messrs. Tod & M'Gregor in the sixties. Mr Thom showed his adaptation of the Paterson heater only in diagrammatic form, and thus deprived his illustration of any value it might have to members of the Institution, as the good working of the apparatus depended almost entirely upon details and proportions, none of which were given by Mr Thom. Regarding the other auxiliaries, singly or in combination, he failed to see anything new in principle, and if there were any improvements in details over existing gear Mr Thom had carefully abstained from mentioning them. The one exception to that might be the spring on the float-tank, and that was certainly not new. The respective merits of the spring and bucket balance weight for that particular purpose was settled years ago, with the result that the spring was only used where the weight could not be applied. He might say that on account of the meagre character of the paper, and the want of definite data, there did not seem to be much room for further remark. Knowing Mr Thom's ability and experience, he could only say in conclusion that he considered he had not done himself justice by his present contribution to the Institution's Transactions.

Discussion.

The discussion on this paper took place on 21st March, 1899.

Mr THOM remarked that before the discussion commenced he wished to state that there was some difference between the H.P. valves of the various engines he had referred to. Also, that he had placed on the wall, a diagram of the indicator cards taken from the engine A illustrated in the paper.

Mr MATTHEW PAUL (Member) said that the engines described as having two pairs of cranks at right angles, the cranks of each pair being opposite, were, so far as the turning effort on the shaft was concerned, equivalent to ordinary two-crank compound engines with the cranks at right angles. That being so, they might sum up the powers of the two forward cylinders and the two after cylinders, and regard these as concentrated on two cranks at right angles. Taking the figures which Mr Thom had given for the engines described, engine A showed 425 H.P. on the forward, and 235 H.P. on the after cranks; engine B showed 1104·4 on the forward, and 649·7 on the after cranks; while engine C showed 325·5 on the forward, and only 129 on the after cranks. Regarding vibration, he did not know that it was of very great consequence to secure an engine with as equal a turning moment as possible, but he had always understood that, for the sake of the shaft, it was desirable to have the turning effort as equal as possible, and he would like to ask Mr Thom whether in the engine C, with nearly three times the power on the forward pair of cranks that there was on the after pair, any special provision had been made in the size of shaft for the extremely unequal turning effort which that was bound to produce. Of course the ratio of the maximum to the mean turning effort was one of the most important factors in determining the shaft size for a certain power, and in Lloyd's and other rules four-crank engines had a smaller constant for the shaft than even a triple-expansion engine. He would be very much astonished if the shaft of Mr Thom's engine—assuming the size of it to be fixed by those rules—was anything like sufficiently strong for the work it had to do in face of the variation of the turning effort. On page 216 Mr Thom

Mr Matthew Paul.

referred to the peculiar form of the indicator diagrams. In several cases recently he had found that the old idea, if a "text-book" form of diagram were obtained they had a necessarily satisfactory engine, either in the matter of smooth-running or economy, was a delusion and a snare. An engine which might be neither a sweet-running engine nor an economical one might give the most perfect diagrams conceivable. Personally, he had come to the conclusion that the shape of the diagrams might be what it liked, that the thing to aim at was a smooth-running engine and an economical one. While in some cases the form of the indicator diagrams might be an accurate indication of the performance of the engine, it was not *by itself* anything of a guide as to the real performance. In the closing sentence of Mr Thom's paper, he said—"Further, the friction must be much less in a direct-acting pump working at twenty double strokes per minute than that of a pump working at, say, one hundred and twenty strokes." That was a statement which appeared to him to require qualification. He could conceive it quite possible that there were circumstances in which a direct-acting pump at twenty double strokes per minute might have *more* friction than a pump working at 120 strokes. It seemed to him that Mr Thom at least overstated the case, and that there was no *necessity* for friction in a pump working at twenty strokes per minute being less than in one working at 120 strokes.

Mr W. C. WARDEN (Member) was somewhat surprised that Mr Thom had made no reference to the work previously done in the same direction by Messrs G. E. Belliss & Co., of Birmingham. For the diagram exposed to view on the wall he was indebted to the courtesy of the Institution of Mechanical Engineers. It showed the engines of H.M. torpedo boat destroyers "Swordfish" and "Spitfire," designed by Messrs Belliss & Co. in 1894; described by Mr Morcom in his paper read before that Institution on the 28th July, 1897; and subsequently largely illustrated in the *Technical Press*. He therefore concluded that Mr Thom could hardly have missed seeing some at least of the references to those engines. He understood that Messrs Belliss claimed no proprietary rights in the

design, which came naturally to them, because the arrangement of high pressure and intermediate cylinders was simply the single eccentric arrangement of the compound engine which they had used in their well-known electric light engines, since they first introduced it in the dynamo engines for H.M.S. "Crescent," in the year 1890. Similarly, the arrangement of the two low pressure cylinders was that which they introduced shortly afterwards for double-crank single-expansion engines. The engines of the "Swordfish" and "Spitfire" gave out 4,500 I.H.P. collectively, at a speed of 400 revolutions per minute, corresponding tc a piston speed of 1200 feet per minute. This fact should be borne in mind in comparing the design with that brought forward by Mr Thom, as if the engines were designed for the lower piston speeds common in the merchant marine, the piston-valves, ports, and passages would of course be very much reduced in size relatively to the cylinders. Notwithstanding the very severe conditions under which they were worked the engines of the "Swordfish" and "Spitfire" gave the greatest satisfaction, and there was no trouble with them which could be at all attributed to the special valve arrangement adopted. The advantages of the arrangement were—Firstly, the two sets of link motion instead of four, with a consequent reduction in complexity and number of parts. Secondly, a saving in weight and length of the engines. Thirdly, the slide-valves being placed in the position indicated left the two ends of the engine clear for the thrust-block at the one end and the air-pump at the other, and also permitted of a better disposition of the main bearings than would otherwise be the case. Fourthly, there was the reduction in the length of the weight-shaft, which did not overhang the framing at the after end as often happened with other designs. He would point out that while Mr Thom's design of "Parole type" of slide-valve was certainly ingenious, it did not appear to be completely balanced as the piston type of valve in the design he referred to undoubtedly was.

Mr JAMES ANDREWS (Member) thought the value of Mr Thom's paper would have been greatly enhanced if the informatoin con-

Mr James Andrews.

tained in it had referred to one of the engines only in place of being divided among three engines working under different conditions, because a disconnected subject gave rise to many assumptions and speculations and almost precluded discussion. On page 219 Mr Thom said, referring to the machinery of which engine C formed a part, "This installation has been working for twelve months and the coal consumption compares very favourably with that of other vessels," etc. From that quotation one would naturally infer that Mr Thom knew what the actual coal consumption of that vessel was, and he thought it would be interesting to the members if Mr Thom would supply the information, because the engine had not the appearance of being very economical, as he would show later on. On page 216 Mr Thom said, "In the case of the four-crank triple-expansion engine, however, the powers developed in the L.P. cylinders vary very much with the speed. At low speed the power developed in each L.P. cylinder may be only half that developed in the H.P. or I.P. cylinder, while at full speed it may be equal to them." He thought Mr Thom had made a mistake in both cases. In the first place the powers developed in the low pressure cylinders need not vary very much with the speed. If in a triple-expansion engine or a multiple-expansion engine working at full power the power was varied by linking up, the effect upon the relative powers in each cylinder would not be the same as if the variation had been brought about by reducing the initial steam pressure; in fact, the effect in those two cases was diametrically opposite. He supposed that Mr Thom found it varying very much because he adopted one means of varying the power. As an example of the relative powers at different speeds he might refer to the case of H.M.S. "Diadem,"* in which the powers at full power and one-fifth power were practically uniform; that was to say, that at full power they varied from about 2,290 in the first two cylinders to 1,979 in the second two, and at one-fifth power they were about 450 in the first two and an average of 390 in the second two, showing that between full power and one-fifth power the variation was not great. In the

* Transactions Inst. Naval Architects, Vol. XL., 1898.

Mr James Andrews.

second place, the relative powers did not vary in the way they were said to do. On page 216 Mr Thom said that at full speed they may be nearly equal; whereas the table on page 217 showed them to be very unequal, at what he (Mr Andrews) presumed to be their full powers, and from the dimensions of the cylinder he did not see that they could be equal. The inherent defect in the four-crank triple-expansion engine, which could not be overcome, and which did not apply to multiple-cylinder engines completing each stage of expansion in one cylinder, was that the initial load, temperature, range, and power in each cylinder could not be approximately equalised. If the powers and initial loads were equal, then the range of temperature in each cylinder must be unequal. On the other hand, if the range of temperature in each cylinder was alike, then the initial loads and powers must be unequal. The following table gave the comparative results of engine B with another engine of the same type and an ordinary three-crank triple engine, all expanding their steam about the same number of times. The temperature, loads, and steam consumptions were measured from the indicator diagrams, while the powers of engine B were taken from the table on page 217. It would be observed that although the comparison was made with warship engines, which were not intended to be most economical at full power, yet engine B showed the highest steam consumption. If an allowance of 25 per cent. were made for steam not accounted for by the diagrams of engine B, which was a moderate allowance, the steam consumption for the main engine alone became 20 lbs. per I.H.P. per hour. If 8 lbs. of water were evaporated in the boiler per lb. of coal, then the coal consumption worked out at 2½ lbs. per I.H.P. per hour without taking auxiliary machinery into account at all, which was certainly not a very economical result. The temperature ranges were also very unequal and no doubt accounted for part of the steam missing from the L.P. cylinder. But perhaps the least satisfactory feature in this engine was the loads on each piston. If the bearing surfaces and moving parts were large enough and strong enough for the I.P. cylinder, then they must be twice too large and twice too strong for

	Engine B.			H.M.S. "Powerful."			Battleship Engine.		
Type of Engine ...	4-Crank Triple.			4-Crank Triple.			3-Crank Triple.		
	H.P.	I.P.	L.P.	H.P.	I.P.	L.P.	H.P.	I.P.	L.P.
Temp. Range ...	65	65	80 72	66	57	71	53	57	60
Loads in Lbs. ...	26,400	48,200	24,750	172,000	166,000	85,000	85,000	103,000	106,000
I.H.P.	555	549	336 313	4,287	4,233	2,263 2,238	2,042	2,130	2,420
Steam per I.H.P. ...	16·15	15·3	10·52	13·84	14·1	12·87	15·0	14·75	13·3
No. of Expansions ..	8·5 (about)			7·91			6·47		
Steam Pressure ...	160			205			145		
Coal Consumption	—			—			2·6		

Mr James Andrews.

the other three cylinders—a state of things which was neither conducive to economy in material nor liable to improve the balance of an engine. Neither would it be readily conceded that the friction at the bearings was so much less than the three-crank triple-engine as Mr Thom asserted it to be. On measuring the steam consumption from the indicator diagrams he was astonished to find it so excessive in the H.P. cylinder and how much of it had disappeared at the L.P. cylinder. As he had already said, the excessive range of temperature would account for that to some extent, but it could not account for 35 per cent. being missing. Having designed a great number of slide-valves with relief rings and also exhausting through the back, he was apprehensive that the rings shown on the valves, Fig. 4, were much too large. No one could look at the steam line of the after L.P. cylinder diagrams without being apprehensive that the valve was leaking, but when added to the amount of steam missing the proof was, he thought, too convincing to bear further discussion. It might be asked why the after L.P. valve leaked in preference to the forward one. It was because the after valve had three steam ports, while the forward one had only two steam ports, and having the least load on the back it came off its face first and kept the other valve up to its face. It would also be noticed that the difference of pressure between the L.P. cylinder and the condenser was 3·5 lbs. in the forward cylinder and 4½ lbs. in the after L.P. cylinder, an amount that few engineers would tolerate. It would be interesting to know what this difference was in engine C, with the feed-heater in the exhaust pipe.

Mr THOM, in reply, said Mr Paul had stated that on analysis he found the four-crank engine had the same turning moment as a compound engine with two cranks; but perhaps Mr Paul was not aware that in some compound engines the turning moment was as good as that in most triple-expansion engines. Regarding the friction of the air-pump, as compared with that of a separate pump, since the pumps were the same size, if the independent pump did its work satisfactorily at 20 strokes while the other required to run at 120 strokes, he thought there could be no question that the

Mr John Thom.
frictional loss in the case of the independent pump would be much less than that of the other. He was very glad that Mr Warden had exhibited his diagram, because it allowed him to explain certain differences. The diagram showed four complete piston-valves, in tandem arrangement for four cylinders. Certainly only two sets of valve-gear were used, but neither Mr Belliss nor he could claim this latter arrangement, the only point in respect to which the designs were similar. In the engines he (Mr Thom) had illustrated, the cylinders were cast separate; but with Mr Belliss' arrangement they had to be cast together in pairs, and the valve came between them, an arrangement that would not be practicable at all in the case of an engine of large size. Further, a flat valve was much to be preferred to a piston-valve between two L.P. cylinders, as it enabled the cylinders to be kept close together. Certainly no one would use a piston-valve for a low pressure engine, who could put in a flat valve, especially if it were designed so that it would work with as little friction as a piston-valve. The statement that the steam pressure on the H.P. piston-valve was unbalanced, was quite true in the first case. On the second set of engines, however, the valve was balanced, by carrying the high pressure steam through to the back. It was found that there was really very little difference in the working of the two valves; the one with the side pressure would have been heavier to work, but the exhaust itself was utilised to assist in working it, and the eccentrics worked as well with the unbalanced as with the balanced valve. Mr Andrews had asked a very pertinent question regarding coal consumption. In the first ship fitted with the complete arrangement of separate pumps (one of a fleet of thirty vessels) the average coal consumption for twelve months compared favourably with that of any of the other vessels, and her speed was rather better. The fact that the owner was fitting four more vessels with a similar arrangement showed that the coal consumption must be satisfactory. This was a better assurance of economy than any figure taken from sea data of coal consumption per I.H.P. Mr Andrews and others laid great stress on the small power in the

L.P. cylinders. The diagrams with low powers in the L.P. cylinders were shown by him to bear out his statement, that the friction was reduced on the main bearings when the two L.P. cylinders were kept close together, instead of one cylinder being placed at one end of the engines, and the other cylinder at the other end, as was sometimes done. To show that it was quite possible to have as much horse power in each L.P. cylinder, at full power, as in the H.P. cylinder, and how the power was reduced in the L.P. cylinders as compared with that of the H.P. cylinder, at lower speeds, he appended the following table of results taken from a set of four cylinder engines. The diameters of the cylinders were H.P. 18 inches, I.P. 28½ inches, and two L.P.'s each 32 inches; stroke 27 inches; boiler pressure 170 lbs. per square inch. (See Table.) No amount of linking-up could affect these results to any appreciable extent. Mr Andrews had gone through the diagrams and worked out a result of 2½ lbs. of coal per I.H.P. per hour. He (Mr Thom) did not follow him through all his calculations, because the actual coal used on the twelve hours' coal consumption trial (as measured by the builders) was 1·82 lbs. of Scotch coal per I.H.P. per hour, working with forced draught of 2¾ inches water-gauge pressure at the fan. Making the usual allowance of fifteen per cent. to bring this to the Welsh coal equivalent, the Welsh coal consumption would be 1·54 lbs, per I.H.P. per hour. The difference between this figure and Mr Andrews' final result showed that his intermediate calculations could not be very reliable. Mr Andrews said that probably the Fairfield engine had not got valves of the same type as Mr Thom's. They had a limit of about thirty-five per cent. of steam between the high and the low pressure cylinders. The diagrams analysed by Mr Andrews were the actual diagrams taken from the engines with which the twelve hours coal consumption trial was made, and there was no getting over that result. Mr Andrews mentioned that he had been unfortunate in designing L.P. slide valves where they had to exhaust through the back, as he could not make them steam tight, and that he anticipated the same result with the L.P. valves of engine A, and also that the

Mr John Thom.

after L.P. valve would be repeatedly off the face. If the sketch of the L.P. valves were examined it would be seen that when the valves were in position the two faces of the slip joint were about $\frac{1}{16}$-inch apart. During the first trial of engine A, indicator diagrams were taken and the readings on the receiver pressure gauges were carefully noted. After the trial, the valves were taken out and a soft $\frac{3}{8}$-inch asbestos ring joint was slipped on the

Revs.	Indicated Horse Power.				
	H.P.	I.P.	FOR'D. L.P.	AFT. L.P.	TOTAL.
40·26	9·944	14·255	2·88	2·88	29·95
63·32	131·281	146·984	53·804	49·646	381·71
109·7	140·629	151·211	55·354	49·985	397·18
136·73	256·755	305·723	131·883	133·460	827·82
155·14	377·264	499·722	204·428	211·575	1292·99
164·42	345·748	464·187	356·127	369·651	1535·71

valve. The valves were then compressed together until they were close enough to be again pushed into place in the casing. The engine was afterwards tried, and the results were the same as those obtained before the joint was put in. That showed that Mr Andrews was again wrong in his supposition about the after valve coming off the face, or the joint leaking, as it was hermetically sealed. With reference to Mr Weir's communication, the first thing mentioned was his (Mr Thom's) statement that the feed-heater in the exhaust-pipe raised the temperature, increased the vacuum, and kept oil out of the condenser, and that he had been very rash in making that statement as he had nothing to show in support of it. The results given in the table were taken on the

Mr John Thom.

official trial. Every engineer had his own idea as to what vacuum he should carry on a trial trip. Some did not want anything more than 22 inches, some wanted 25 inches, and so on; they could always regulate the vacuum by the amouut of circulating-water—that fact was well enough known. What he meant by the statement regarding the increase of vacuum was, that if the engine was running with the heater off, and if it were turned on, all the other conditions in the meantime being kept the same, the gauge would then show 1½ inches more vacuum with the heater on than when it was off. Mr Weir said that he claimed that "the arrangement kept oil out of the condenser, and on reference to his diagram it appeared that if the oil did not go to the condenser, the only other place it could go to was the boiler." He could assure Mr Weir that this did not necessarily follow, for, without the intervention of a filter, the bilge-pump was used to discharge this oil overboard. This could not have been done in the sixties, or Mr Weir would have been aware of how it was done. Mr Weir had not been explicit in stating how the respective merits of the spring and the bucket balance weight had been settled; but taking Mr Weir's modesty into account, he presumed that he had tried it himself. He felt that Mr Weir had not displayed the same ability and care in trying the spring as the makers of these pumps, or he would never have put on a balance weight again. After one had got used to it, he would as soon think of going back to the bucket weight, as taking the springs off a safety-valve and substituting the old dead weight safety-valve again.

THE MECHANICS OF THE CENTRIFUGAL MACHINE.

By Mr C. A. MATTHEY (Member).

(SEE PLATES XI. AND XII.)

Read 21st February, 1899.

IN the following paper I shall confine myself to the consideration of the stresses to which the centrifugal machine is subjected, the conditions necessary to its safe and stable running, and the relative speeds at which machines of different sizes must be run to achieve the same results, as it is impossible, in the time at my disposal, to consider the applications of the machine.

The centrifugal machine consists essentially of a basket or drum mounted on an axle which runs in a bearing or bearings, and of a surrounding casing which catches the fluid, if any, that is thrown off from the basket or drum, and which also protects the attendant from contact with the revolving part.

The revolving vessel is always a solid of revolution, for considerations of strength, and nearly always a cylinder, or a frustum of a slightly tapering cone. When, for certain purposes, it is perforated with holes for the escape of the liquid which is to be separated from the solid contents of the vessel, it is called a basket; when, in other cases, it is a water-tight imperforate vessel, it is called a drum. I shall consider only cylindrical vessels, as the arguments applying to them may easily be extended to any solid of revolution, and I shall use the word drum, unless a basket is specially meant, to signify either drum or basket.

As a first step to ascertaining the stresses which the drum has to resist, I propose to find, by simple reasoning, the measure of the centrifugal force of a particle of given weight moving in a given circle at a given velocity. There is no need to apologise for reverting to such an elementary matter before this Institution, for the reason

that I have never yet seen in any text-book on elementary mechanics a proof that did not involve the use of the differential calculus, or arguments based on the conception of *limits*, which are only the calculus in disguise, and are not convincing to many people.

I will ask you to grant one axiom, that—If a heavy particle move at a uniform rate in a given circle under the action of a central force, such as the tension of a string connecting the body with the centre of the circle, the magnitude of that force is the same at every point of the circle. It can hardly be doubted that if the speed be the same and the curvature the same, the deflecting force will be the same.

In Fig. 1, C is a fixed point to which a heavy particle of weight W pounds is connected by a string of length C P, or r feet. The particle is moving with a uniform linear velocity of v feet per second, and under the constraint of the string describes the circle P B A in the direction shown by the arrow heads.

Draw P C, the diameter A B at right angles to P C, and the tangents P D and B D.

Now, P is moving in the direction P D at v feet per second, and all its motion in that direction is destroyed by the time it reaches the line B D; that is after it has traversed a distance P D or r, in that direction. The energy required to stop it is equal to its *vis viva*, or

$$\frac{W v^2}{2g} \text{ foot pounds;}$$

and if this energy is destroyed in a distance of r feet by a uniform retarding force, that force is

$$\frac{W v^2}{2gr} \text{ pounds.}$$

The retarding force, however, is not unform, but increases from nothing at P to the full tension of the string at B, and varies directly as the distance of the particle from the line P C. For the tension of the string is the only force acting on the particle, and the retarding force in the direction P D is the component of the tension in that direction. Thus, if the constant tension be conveniently

represented by the radius, the retarding forces, when the particle is at P_1 or P_2, are P_1Q_1 or P_2Q_2 respectively. That is, if the rectangle P E represents the arrest of motion by a uniform retarding force D E, the arrest by the varying component of the tension of the string is represented by the triangle F P D, of the same area, and twice the height. Therefore, F D, the tension of the string, is

$$\frac{W v^2}{2gr} \times 2 = \frac{W v^2}{gr} \text{ or } \frac{m v^2}{r} \text{ in mass units.}$$

Engineers generally require this force expressed in terms of the number of revolutions per minute, rather than of the linear velocity per second.

Of course, if n be the revolutions per minute,

$$v = \frac{2\pi r n}{60},$$

$$\therefore \text{ centrifugal force} = \frac{W \times 4\pi^2 r^2 n^2}{60^2 \times 32r} = \cdot 000341\, W r n^2,$$

the well-known formula.

So much for a heavy particle. Let us now consider a body of finite dimensions.

I will detain you one minute to prove that the centrifugal force is the same as if all the mass were concentrated in the centre of gravity. Many people think that it is the radius of gyration, or radius of mean square, that should be taken in the formula for centrifugal force, and not the radius of the centre of gravity.

It will be seen from the formula that, the centrifugal force of a particle rotating about a centre with a given angular velocity varies as its distance from the centre, not as the square of that distance. This is probably the cause of the error concerning the radius of gyration. It is often said—"Surely the centrifugal force varies as the square of the velocity, and the velocity varies as the radius." But it is only true that the centrifugal force varies as the square of the velocity, if the radius remains constant. The centrifugal force of unit mass is $\frac{v^2}{r}$, and in the case of uniform angular velocity, v varies as r; so we may write $\frac{r^2}{r}$, or simply r.

In Fig. 2, let C be the centre about which two particles, A and B, of different weights, revolve as part of a rigid system; always preserving the same relative positions to each other and to the centre; the triangle A B C is then always the same.

Join AB, and divide it at D in the inverse ratio of the weights of A and B, so that D is the centre of gravity.

Let m be the weight of A; n, that of B. Then the centrifugal force of A is m times C A; and that of B, n times C B.

But by the triangle of forces, $m \times$ CA is equivalent to a force $m \times$ C D and a force $m \times$ D A.

Similarly, $n \times$ C B is equivalent to $n \times$ C D and $n \times$ D B.

But by construction, $m \times$ D A $= n \times$ D B; and these forces are in opposite directions, therefore they annul one another.

Hence, the resultant of the two centrifugal forces is $(m+n)$ C D, which is the centrifugal force of the two particles when placed at D.

I will now proceed to consider a drum of thin plate revolving about its axis, and to find the tension set up in the metal by the motion. First, take the empty drum. Consider a length of drum measuring one inch parallel to the axis, and take one inch length of the circumference of this band. A square inch of metal plate is thus obtained whose weight is known from the thickness and density of the metal. It has a certain centrifugal force calculated as above, its thickness being so small relatively to the radius of the drum that the latter may be taken as the radius of the centre of gravity. Every other square inch is similarly situated; there is, therefore, a condition similar to that of a cylinder at rest, with a fluid pressure inside it. To find the tension of the shell per square inch, I proceed, as in boiler calculations, and multiply the radius in inches by the pressure per square inch, and divide by the thickness of the plate in inches.

Clearly, for a given empty drum and a given speed this tension per square inch is independent of the thickness of plate; because the virtual fluid pressure varies as the thickness, and so does the area of metal to resist the stress. Further, the tension per square inch is independent of the radius, and depends only on the linear

velocity. For, in the complete calculation, it is necessary to both divide and multiply by the radius; to divide by it in finding the centrifugal force of a square inch of shell, and to multiply by it in what may be called the boiler part of the calculation.

It is well, therefore, to have an expression for the tension per square inch in terms of the linear velocity only. It is useful in many other cases than centrifugal machines. Since the tension is independent of the thickness, take a hoop, of one square inch in section, of steel weighing ·28 lb. per cubic inch.

The tension on the square inch of cross section is

$$\frac{\cdot 28\, v^2}{gr} \times 12\, r = \cdot 105\, v^2;$$

v being feet per second linear speed.

The radius r is in feet for centrfugal force, and $12r$ is the radius in inches for the fluid pressure calculation.

For cast iron of ·26 lb. per cubic inch, we have

$$\frac{\cdot 26\, v^2 \times 12\, r}{g\, r} = \cdot 0975\, v^2.$$

It may, therefore, be taken as an easy approximate rule, for both steel and cast iron, that the tension per square inch in pounds is $= \frac{v^2}{10}$.

This is about 5 per cent. too low for steel, and 2½ per cent. too high for cast iron.

That being so with the empty drum, let a load of solid material, such as sugar in grains, be introduced into the drum, and disposed in a concentric annulus on the walls of the drum. It is not my contention that the dry sugar is all that need be taken into account in determining the strength of a sugar centrifugal machine, I am only investigating the general question of the effect of the presence of a solid.

Fig. 3 represents the annular mass. Let A B be one inch of the circumference of the drum, in a slice one inch deep as before. Draw the radii O C A, O D B.

Then the wedge of matter A C D B presses with its centrifugal

force on the square inch, of which A B is one edge. This increases the virtual fluid pressure without contributing anything to the strength of the shell. The tension per square inch is increased above that of the empty shell at the same speed, in the ratio of the sum of the centrifugal forces of the wedge of solid matter and of the square inch of shell, to that of the piece of shell only. Not, observe, in the ratio of the sum of the weights of wedge and shell to weight of shell only; because the radius of the centre of gravity of the wedge is less than that of the shell.

The radius of the centre of gravity of the wedge is the same as that of the plane area A C D B; which, by a well-known proposition given in all elementary works on mechanics, lies in the centre line, and divides it in the ratio

$$\frac{2\,AB + CD}{AB + 2\,CD},$$

the shorter length being, of course, next the larger end. The volume of the wedge is easily calculated, as $CD = \frac{OC}{OA}$ of an inch. Having the volume, the weight of the wedge follows from the density of the material. But in the case of granular matter, not the true, but the apparent specific gravity must be taken. Thus, for example, the real specific gravity of sugar, say, of a lump of sugar candy, is 1·6 or 100 lbs. per cubic foot; but sugar in grains, with air spaces between the grains, weighs only 62½ lbs. per cubic foot, or as nearly as possible the same as water.

Next, suppose that instead of a granular solid in a perforated basket we have a liquid in a water-tight drum. How are the conditions altered? It might appear at first sight as if the pressure of the liquid on the walls were the same as that of a solid of equal weight and equal depth of annulus, but it is not so. The pressure is the same as if all the liquid were concentrated on the walls; so that, in calculating the pressure on a square inch, the radius of the drum must be taken, and not that of the centre of gravity of the wedge. This statement is sometimes received with incredulity, but

it is nevertheless true. Nay, more, the pressure per square inch is absolutely independent of the diameter of the drum for a given quantity of liquid per inch depth of drum, and for a given number of revolutions per minute; nor does it depend on the density of the liquid, but only on its total weight.

Consider any weight of liquid placed in a cylinder one inch in depth, and of any diameter; let the quantity of liquid be such as to make, when spun, a film of inconsiderable thickness on the circumference of the drum. At any given angular velocity this weight of liquid has a certain centrifugal force, which is divided over the number of square inches there are in the circumference, producing a certain pressure per square inch.

Now, let the same liquid be transferred to another drum, also one inch deep, and m times as large in diameter, turning at the same angular velocity as the other. The total centrifugal force of the liquid is m times as great as before, but the number of square inches in the circumference is also m times as great; and, therefore, the pressure per square inch remains the same. This holds good for any number of thin films inside the first, and consequently, for a fluid mass of any thickness, even for the case of a cylinder full of water.

Clearly, then, the pressure caused per square inch by any weight of liquid per inch of depth can be expressed in terms simply of that of weight and the rate of revolution.

Thus r being radius in feet (and $12r$ in inches), we have

$$\text{Pressure in lbs. per square inch} = \frac{\text{total centrifugal force in lbs.}}{\text{circumference of drum in inches.}}$$

$$= \frac{\cdot 000341\ \mathrm{W} r n^2}{2\pi \times 12r}.$$

$$= \cdot 00000452\ \mathrm{W} n^2.$$

No general expression can be given, in the case of solids, for the variation of stress of shell, with variation of diameter, etc., because the actual size is required to arrive at the shape of the wedge. But, in the case of liquid loads, it is easy. If "proportionally loaded

shells" are those in which the weight of fluid bears the same ratio to the weight of shell, the following statements are true:—

In proportionally loaded shells the tension per square inch, depends on the linear velocity only, being as the square, and is independent of the diameter.

The weight of liquid contained, per inch of depth, varies directly as the diameter and as the thickness of the plate.

For given angular velocity the hydrostatic pressure varies directly as the diameter and as the thickness of the plate; and

The shell tension varies as the square of the diameter.

If any proposed shell appears weak, and the thickness be increased to get more strength, the increase in strength is not proportional to the increase in thickness; because the additional weight, and consequent centrifugal force introduced, go to discount the advantage.

For example, take a shell $\frac{1}{4}$-inch thick, with 4 cubic inches of water on every square inch. A square inch of the plate weighs ·07 lb., the water on it ·14 lb., or, twice as much. Whatever the speed or radius, these weights will both have the same multipliers to arrive at their centrifugal force; therefore, for comparison, one may take the numerals 1 and 2 as the respective tensions caused by plate and water, and, if the thickness be doubled, the numerals 2 and 2 will express those tensions.

Now, the safety of the plate is proportional to

$$\frac{\text{thickness of plate}}{\text{total weight.}}$$

In the case, however, of the $\frac{1}{4}$-inch plate,

$$\frac{1}{1+2} = \frac{1}{3}$$

and, for the $\frac{1}{2}$-inch plate,

$$\frac{2}{2+2} = \frac{1}{2}$$

So, in this case, increasing the plate 100% only gives 50% more security.

I now come to the question of corresponding speeds. Given a machine of a certain diameter, running at a certain speed, and doing satisfactorily a certain kind of work: At what speed must a machine of a different diameter be run to do the same kind of work? By the same kind of work, I mean, for example, curing sugar to the same condition, wringing textile goods to the same degree of dryness, or separating two fluids, such as milk and cream, as efficiently and as quickly. This is a most important question, and the failure to understand it has led to many disappointments.

Evidently there must be the same centrifugal force in the two machines for a particle of a given weight on the circumference.

If two drums, of diameter d and d_1 respectively, and revolutions per minute n and n_1, are to have the same centrifugal force, it follows from our formula that

$$dn^2 = d_1 n_1^2,$$

$$\text{that is } \frac{n}{n_1} = \sqrt{\frac{d_1}{d}}$$

or the revolutions for equal centrifugal force vary inversely, not as the diameters, but as their square roots.

It follows that, if one drum be m times the diameter of the other, its linear speed, to give the same separating force, must be $\sqrt{m}$ times the diameter of the smaller one. That is to say, for similar machines, the linear speeds must be as the square root of the dimensions—a law which will be recognised as being identical with Froude's Law of Comparison. It is probable that the naval architect and the maker of centrifugal machines are regarding the same truth from different standpoints. If the machines are run at the same linear speed, the centrifugal force of the smaller one is $(\sqrt{m})^2$, or m times that of the larger, which, indeed, follows at once from the elementary expression $\frac{v^2}{r}$.

Here is a strong reason for employing small machines when treating substances difficult to separate. The linear speed is limited, for that determines the shell tension; therefore, to get a high separating force, we must make r small. But, even when the large

machine is safe and practicable, there is another reason for choosing the small one, and that is that the horse-power required to treat a given quantity of a given substance in a given time varies directly as the diameter of the drum employed. The power per machine is still greater, because the larger machine holds more; but the total power for a given quantity in a given time varies as the diameter. For nearly the whole motive power goes in accelerating the drum and load, and the energy imparted is as v^2, or $(\sqrt{\text{dia.}})^2$—that is, simply as the diameter. Of course, practical considerations prevent the employment of too small machines and too many of them. The attendant must have elbow-room in the drum for discharging the material, but a 40-inch drum is always preferable to a 60-inch, as one third less power is wanted.

So far, I have supposed that, as is generally the case, the thickness of the plate is negligible in comparison with the radius. But in some small machines where high separating force is required, such as cream-separators, this is not the case. Time will not permit going fully into this matter, but I will just indicate one interesting fact.

The shell is subjected to tension from two causes—from its own weight, and from the liquid within it.

Suppose the drum to be at rest, and to be subjected to an internal liquid pressure equal to that due to the load when revolving; then, in this case, the metal inside the cylinder is subjected to a greater tension than the outside.

In cast hydraulic cylinders, for instance, the outer layers only begin to take up their stress when the inner layers are highly stretched; and for this reason guns are built up with shrunk hoops, having an increasing initial tension as they get farther from the centre, so that when the gaseous pressure comes on, the tension of all the hoops may be about the same.

When the empty drum is revolving, the tension due to centrifugal force is greater outside than inside, because the linear velocity is greater there. The simple formula $\frac{v^2}{10}$ which was arrived at for thin

hoops, does not apply to the outer and inner layers respectively, because the layers of which the thickness is made up are not free to stretch independently; the outside tension is less, and the inside greater than that formula gives.

So when the drum is spun with its load, and the tensions due to both causes come on it, it is rather in the condition of the built-up gun than of the cast hydraulic cylinder. And it is possible, though the calculation is difficult, to make a thick drum in which the inside and outside layers are subjected to equal tension—a very desirable result, where the utmost strength of the best metal that can be made is required.

Having considered the principal points in the construction of the shell, I pass to the behaviour of the machine when running.

In the early days of centrifugal machines they were constructed with horizontal spindles, but this type has disappeared almost entirely. There are a few surviving examples in Peru, and possibly elsewhere.

Next they were made with vertical spindles, running in two fixed bearings, the lower one forming a step to support the weight.

Thousands of such machines are working fairly well all over the world, but their bearings wear out rapidly, and they take more power to drive them than a type I shall draw attention to, on account of the impossibility of insuring that the drum and its contents shall be balanced about the axis. The wear and loss of power, and the danger to axle and bearings, of an unbalanced revolving system, are well known.

The type of machine which has superseded the above is that invented some thirty years ago by David Weston, an American. It is now made by several makers at home and abroad, and has for a long time been recognised as the best pattern for most purposes to which centrifugal machines are applied.

Instead of having a fixed axis, it is suspended from a point near the top of the spindle, about which it can oscillate within certain limits, being constrained by the pressure of india-rubber buffers.

Fig. IV. shows the principal parts of the Weston machine. *a* is

a beam from which the machine hangs; *b* is a bracket in halves, holding two india-rubber buffers *c c*, which grip the internal spindle *e*, which does not revolve; *f* is the outer revolving spindle, to which are keyed the pulley *d* for the belt and brake, and the basket *g*; *h* is the protective casing.

When the machine is not revolving, if the basket be drawn to one side by the hand and released, it returns to the vertical with considerable force, as both its weight and the pressure of the buffers combine to make it do so.

When made to revolve with a load in it of liquid or plastic matter, it is almost inevitable that the centre of gravity will not lie in the centre line of the spindle, owing to the unequal distribution of the load; the basket then revolves, not about the geometric centre, but about the centre of gravity. This circumstance very greatly assists the redistribution of the load, causing part of it to move from the side where there is too much, to the side where there is too little. As the centre of gravity shifts, the machine revolves about its new position, until in a short time, if the material is fairly plastic, the centre of gravity coincides with the geometrical centre, and the spindle runs true. Sometimes this condition never arrives; in treating some solids, carbonate of soda, for instance, a great lump is occasionally found on one side which cannot distribute itself, and which causes a permanent eccentric motion. If this be not too great, no harm results, only the spindle does not run quite true.

But if it does run true, at the moment of arriving at this condition the spindle is sure to be in an inclined position to the vertical. It might be supposed that, in such a case, the weight of the machine and the pressure of the india-rubbers push the spindles straight in to the vertical. It is found, however, that the spindle takes up a second motion, its axis describing a cone in space, this motion being very much slower than the rotation about its own axis. The vertical angle of this cone gradually diminishes, each point in the axis describing a spiral till the spindle is vertical.

It may be thought that it is the weight of the machine and the pressure of the india-rubbers which ultimately bring the spindle into

the vertical position, even if it goes round the spiral several times before it gets there, but that is not so. The fact is, the rapidly revolving machine possesses the properties of the *gyroscope*, that fascinating piece of mechanism which so many regard as a sort of *ornithorhyncus paradoxus* in the mechanical world: a creature possessing functions which it has no business to possess.

Let us leave the centrifugal machine for a minute and experiment with the gyroscope. Here is a nicely balanced top turning in bear-

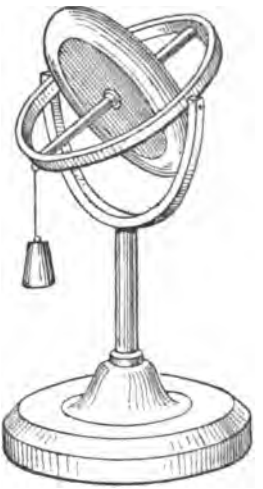

Fig. 10.

ings in a circular hoop; the hoop turns on a horizontal axis at right angles to the spindle of the top, in bearings in a Y-shaped support; and this support again turns about a vertical axis.

Now, I spin the top, with the spindle nearly but not quite vertical, so that it revolves in the direction of a watch lying face up on the table. I now try to turn the Y-frame about its vertical axis in the same direction as the top; the frame feels very stiff, but the top immediately places its spindle vertical, and then the Y-frame turns

easily enough. I repeat this experiment, placing the spindle farther and farther away from the vertical each time, but it always returns to the vertical with the same end up. If I now reverse the couple applied to the Y-frame, the top immediately turns upside down so that both top and frame seen from above, revolve *contra-watchwise.* Evidently then it has this property, that it will, if free, place itself so that its spindle coincides with the axis of the Y-frame, and its rotation is in the same direction as that of the impressed couple.

If I place the apparatus horizontally or at any angle, and apply a couple to the Y-frame, precisely the same thing happens. If I hold the instrument at arm's length and swing my arm round in any plane, the spindle of the top places itself at right angles to that plane; and as I reverse the motion of my arm the spindle turns through 180 degrees, so as still to revolve in the same sense as the frame turns.

This motion of the spindle into the position of correspondence with the applied couple is called precession. Where the applied couple remains in one plane, as in the previous experiments, and the spindle is free to turn, the precession takes place through an angle of not more than 180 degrees, and then stops, for equilibrium is obtained. Now, placing the instrument on the table in its usual position, with the axis of the Y-frame vertical, and the top-spindle either horizontal or inclined, I spin the top and apply a weight to the hoop at one end of the spindle; then, instead of the spindle turning in a vertical plane and becoming upright, as it would if it were not spinning, the system revolves continuously about its vertical axis. The reason is, that the couple caused by the weight about a horizontal axis, makes an *effort to precess* about the vertical. The system obeys this effort to precess, and makes a small movement towards the position in which the spindle is at right angles to the plane of the couple; but in doing so changes the plane of the applied couple by carrying the weight round with it. In the new position there is still an effort to precess, so the precession continues and never stops; the plane of the applied couple is always changing and chasing the system round, so to speak, so that the spindle of the top

never gets into the position of identity of revolution with the applied couple. If I place the weight at the other end of the spindle, the precession, of course, reverses its direction. If I increase the weight the speed of precession increases, but the spindle of the top preserves the same angle with the vertical.

This shows that the weight of the Weston centrifugal machine, and the pressure of the india-rubber buffers towards the vertical, will not bring the spindle upright but will only make it precess. Yet we know that there are thousands of Weston machines which do come upright. What is the reason? Let us ask the gyroscope.

It is easy to predict which way the precession will take place in the case of an inclined top, such as the Weston machine is when deflected from the vertical, supported above its centre of gravity. It is only necessary to remember the property with which I started, that the spindle is trying to place itself where it will revolve in the same direction as the couple formed by its weight and the upward reaction of the support. When the centre of gravity is below the point of support, the precession will be contrary to the rotation of the spindle, while if the centre of gravity be above the point of support, the precession will be in the same direction as the rotation.

The suspended centrifugal machine therefore precesses in a contrary direction to the rotation. I place the gyroscope with the spindle inclined to the vertical and the lower end loaded, so as to represent the machine.

Does the rule which holds good in the case of a single applied couple, also obtain when a second couple is applied? The top having a rapid rotation, and precessing under the action of a vertical couple in an ever-changing plane, I apply a horizontal couple to the Y-frame in the same direction as the rotation, that is contrary to the precession. There, you observe the spindle immediately becomes vertical, the loaded end going to the bottom. I reverse the horizontal couple, making it contrary to the rotation and in the same direction as the precession, the top turns upside down, the loaded end going to the highest point. Hence it appears that the rule is general.

The effect of the application of the second couple, when the body is already precessing under the action of gravity, may be described thus:—"Accelerate the precession, and the centre of gravity rises; retard the precession and the centre of gravity falls"—a truth first enunciated by Lord Kelvin. The reason of the stability of the Weston machine will be apparent from the following consideration.

The india-rubber buffers, though elastic, are not perfectly so, and give back less force in expanding than is required to compress them. Hence, there is an absorption of power in keeping up the wobbling motion of the inner spindle in the buffers; in other words, there is a force analogous to friction opposing precession.

As a similar instance of the non-perfect elasticity of india-rubber I might take a solid bicycle tyre. It is compressed in front of the point of contact with the ground, opposing the motion; it expands behind the point of contact, assisting the motion. But it opposes more than it assists, hence the well-known loss of power with the solid tyre.

It is just this slight retardation of the precession which brings the Weston spindle upright and retains it there. The spindle, apart from this action, is not stable even when upright, for the machine is spinning about its longest principal axis, and if free to choose its own axis of rotation it would rotate about the shortest, which is perpendicular to the length of the spindle. But the india-rubbers are always on guard, so to speak, and immediately the spindle leaves the vertical ever so little, precession commences, the india-rubbers retard it, and the spindle returns to the vertical.

The rates of rotation and precession are connected by the following formula—

$$C = \frac{W K^2 \Omega \omega}{g},$$

where C is the applied couple in pounds and feet, K the radius of gyration of the top in feet, Ω the angular velocity of rotation, and ω the angular velocity of precession, g the force of gravity, and W the weight in pounds.

To put this into engineers' notation, let N be revolutions per minute of rotation, and n those of precession; then since

$$\text{angular velocity} = \frac{\text{revs. per min.} \times 2\pi}{60},$$

$$C = \frac{W K^2 \times 4\pi^2 N n}{60^2 \times 32}$$

$$= \cdot 000341\ W K^2 N n,$$

which is very like the formula for centrifugal force.

The analogy is best expressed in angular measure, and stated thus—

(1) To rotate the linear momentum $m v$ with angular velocity ω requires a perpendicular force of magnitude $m v \times \omega$

$$\text{for } \omega = \frac{v}{r} \text{ and so } m v \omega = \frac{m v^2}{r},$$

which is the centrifugal force.

(2) To rotate the angular momentum I ($I\,\Omega$ being the moment of inertia $\frac{W K^2}{g}$), with angular velocity ω requires a perpendicular couple of magnitude $I \Omega \omega = \frac{W K^2 \Omega \omega}{g}$, which is the couple necessary for precession at rate ω.

As to the measure of the couple bringing the spindle in to the vertical, or taking it farther out, when the precession is retarded or accelerated, it is equal to the above couple C multiplied by the angular rate by which the precession is increased or decreased, the increase or decrease being expressed in terms of the natural rate of precession ω, or n revolutions per minute. For instance, if the precession be accelerated to $2n$ revolutions, the extra or impressed speed is only n, and the couple turning the spindle farther from the vertical is C, as above. If the precession be accelerated to $1\frac{1}{2}n$, the extra speed is $\frac{n}{2}$, and the couple is $\frac{C}{2}$. If the precession be absolutely stopped, a backward speed n has been impressed, and the couple bringing the spindle upright has the value C, and in proportion for any backward speed impressed.

The inability to understand this action has led people to suppress

the india-rubbers, and replace them by a universal joint as frictionless as possible, such as a compass or gimbal joint. The attempts failed for want of a couple to retard the precession, the drum dashing against the casing in a most dangerous manner.

Indeed, the Weston machine itself is not all that can be desired. The retarding force of the india-rubbers acts at a very great disadvantage—that is, at a very short radius from the point of suspension—and is necessarily accompanied by the much greater force pressing the spindle towards the centre, which has been known to bend the inner spindle just below the lower india-rubber.

For the treatment of liquids it is not satisfactory, as waves form in the drum before full speed is attained, and these throw the drum off the balance to an extent which the india-rubbers are powerless to prevent. A 30-inch Weston machine 14 inches deep, is almost more than a strong man can control by pressing a lever against the spindle.

Many sugar makers object to the use of the Weston machine for low-class sugars, on account of the uncertainty of its behaviour.

I have quite recently made an attempt to dispense with the india-rubbers, and produce the necessary retardation of the precession by other means.

A machine was constructed, as shown in Fig. 5. It has a solid spindle, quite free to swing about a spherical or ball and socket joint at the top. Without something to retard the precession this machine would lack dynamical stability, in the same way as those I have already alluded to. But, below the drum, the spindle extends a short distance and turns in a hole in a light weight, which rests on the bottom of the monitor case, on which it is free to slide about. As long as the spindle remains upright this weight has no effect, but the moment the spindle leaves the vertical, the weight is dragged round in a small circle. The friction on its support retards the precession, and the spindle returns to the vertical. The weight does not support any part of the weight of the spindle and drum, which hangs entirely on the top support, of which a section is shown in Fig. 6. It will be seen that the support is an oil basin *f*, having

a central pipe rising in the centre, through which the spindle passes. To a cone on the top of the spindle is fastened, by a nut, a piece of cast-iron *d*, whose underside is a portion of a hollow sphere, which fits on a solid spherical segment on the brass bush *e*. This bush has a flat underside which turns on an iron washer *h*, which does not revolve. The flat surfaces take the friction of rotation, after the manner of a thrust-block, while the spherical surfaces give freedom to oscillate. The flat surfaces are drowned in oil. This machine has an imperforate drum, 30 in. diameter by 14 ins. deep, and can be started with water in it without any assistance from the attendant. It is so stable that, when forcibly displaced, the spindle returns to the vertical almost in a straight line instead of a spiral, as in the case of a similar drum mounted on a Weston spindle, and loaded with a solid. When loaded with water, and mounted on the Weston spindle, the machine was almost uncontrollable. The weight of the precession-retarder in the machine, shown in Fig. 5, is less than 10 per cent. of that of the revolving parts, and is probably heavier than need be.

Fig. 7 shows the supporting basin placed above instead of below the beams, and Fig. 8 the general arrangement of a bottom discharging machine so supported. Here the precession-retarder takes the form of a spider with three legs, the extremities of which rest on the upturned edge of the bottom of the monitor case. The spider of the basket, connecting the boss to the outer part, has generally five legs, so any lump of material which will pass through the basket spider will more easily pass the precession-retarder spider.

Fig. 9 shows the support below the beam, and the spindle extended upwards and engaging a precession-retarder resting on the beams. Here the retarding force is transmitted from the point of suspension by cross-bending stresses in the spindle, just as in the Weston machine. This may serve for sugar and similar substances, but for liquids the better place for the retarder is below the drum.

Of course, the Weston spindle may be fitted with the precession-retarder above or below; either retaining its india-rubbers, or

replacing them with a ball and socket, or a gimbal joint, for the inner spindle. One way of steadying an erratic machine is to put a bar across the top of the monitor casing, with a bearing in the centre for the spindle which drags the bar round during precession. The bar may be kept to one approximate position by having a long slot in one end going over a stud fixed at one side of the casing. This is, however, a clumsy contrivance, and much in the way of the attendant; few manufacturers would tolerate it.

It is probable that David Weston himself did not know why his machine ran steadily. But he, and indeed everyone who has handled his machines, down to the most ignorant coolie, has, whether he knew it or not, retarded the precession in order to control oscillations. For the accepted practice is to take a long bar of wood, and, placing it on the top of the monitor casing, to use the framing as a fulcrum, pressing the bar against the spindle. No doubt, most people think that the good is done when the spindle is leaning towards the operator, on the centre so to speak, and he is pushing it towards the vertical. I hope I have made it apparent that that is not so; he is then only increasing the precession. The good is done when the spindle is approaching him, for then he is retarding the precession. If he pushes while the spindle is receding, he does positive harm, and increases the inclination of the spindle. But the frictional-retarder always opposes the precession, hence its superiority.

There is another type of centrifugal machine also due to David Weston, in which the point of suspension is below the drum instead of above, and the oscillation is controlled, as in the type already considered, by india-rubber buffers. Were it not for the buffers, it would be in unstable equilibrium, the precession would be in the same direction as the rotation, and it would be necessary to accelerate the precession in order to make the centre of gravity rise and the spindle to come upright. But the couple caused by the pressure of the india-rubbers overcomes the gravitation couple, and the net couple is therefore in the opposite direction. Hence the precession is contrary to the rotation, and being retarded by the non-

perfect elasticity of the india-rubbers, the system yields to that net couple.

It is easy to see that this type has less stability than the other, because the difference of the couples caused by gravitation on the one hand, and by the pressure of the india-rubbers on the other, is available, and not the sum of those couples as in the case of the suspended machine. For this reason the type with the point of suspension below cannot be used for liquids.

I stated above that acceleration of the precession causes the centre of gravity to rise, yet in this case the retardation causes it to rise. There is no inconsistency if the general law is expressed, thus—If a body revolves and precesses under the action of any couple which changes its plane as the body precesses, the retardation of the precession makes the body yield to the couple, while the acceleration of the precession makes it overcome that couple.

Correspondence.

A MEMBER—Mr Matthey's paper was of considerable interest, more especially in respect to his experiments with the gyroscope. Mr Matthey shewed that when a couple was applied to the Y-frame of the instrument, while the top was spinning, some resistance was offered to a change of position, but the top eventually accommodated itself to a position due to the direction of the couple. A problem which appeared to involve this action of the gyroscope had presented itself to him, and, if Mr Matthey could elucidate it, he thought it would be of considerable interest to the members of the Institution. Any revolving body, such as a screw or a paddle-wheel, became a gyroscope when free to move about any axis other than its own, or free to change its plane of rotation. If the horizontal and vertical axes of the hoop and Y-frame were fixed, and the top made to revolve, What would be the value of the couple to change the plane of rotation? In a screw vessel pitching, or a paddle vessel rolling, while under way, the propeller constantly changed its plane of rotation, and the couple to resist such

change was applied through the shafting, thus throwing additional stresses on the shaft which were not allowed for in any of the recognised rules, and these stresses, he believed, did materially affect the factor of safety. Many good, sound shafts, stronger for their work than recognised rules required, had failed, or shown signs of failure, and the causes had usually been attributed to weak ships, heavy racing, or excessive vibration. These, no doubt, individually or collectively, might be to blame in some cases, but might not the gyroscope in the hands of Mr Matthey clear up another factor in these serious mishaps, and give marine engineers a value for such stresses.

Discussion.

The discussion on this paper took place on 25th April, 1899.

Prof. A. JAMIESON (Member) was impressed with the lucid manner in which Mr Matthey had brought forward the several points in his paper, and was still more impressed by his proving the law of centrifugal force without the use of the calculus. It was only a few meetings ago since Mr Matthey had struck out so hard for the calculus, that he thought he was going to bring before them something that they did not understand. On page 236 there was the expression—"It may therefore be taken as an easy approximate rule for both steel and cast-iron that the tension per square inch in pounds was $= \frac{v^2}{10}$." He had taken the trouble to look up Professor Perry's latest work on Applied Mechanics, published at the end of 1897. On page 323 of that book it was stated that: "Taking the working tensile stress in wrought iron of a pulley as 6,000 lbs. per square inch, the rim speed ought not to exceed 850 feet per second. The usual limiting speed of cast iron pulley rims is 80 feet per second." Would Mr Matthey in his reply kindly distinguish these differences. If the question was worked out by Mr Matthey's formula the stress came to 72,250 lbs. per square inch of tension —a very different matter from Professor Perry's statement? In order to show how little was understood of this intricate subject twenty-five years ago, he would instance a case which came under

Prof. A. Jamieson.

his observation. Whilst attending to the laying and repairing of submarine cables in Brazil, in 1874, he happened to be in the port of Bahia, and was invited to witness the trial of a new centrifugal machine for the drying of sugar. The speed was gradually raised until the machine began to show signs of distress. He was compelled to leave during the trial, and when he returned he was horrified to find one of his friends and a negro had been killed, whilst several others had sustained severe bruises; and the machine was a perfect wreck. It was clear that the proper balancing of the machine had not been understood by the makers, and therefore the lamentable result. He had much pleasure in complimenting Mr Matthey in producing a paper of great practical value in connection with centrifugal machines.

Mr ROBERT T. NAPIER (Member) thought to many present the formula $\frac{W v^2}{2 g}$ had been given a new lease of life; and suggested that Mr Matthey would confer a favour by adding to his paper an appendix giving a demonstration of the formula on page 247, dealing with the gyrostat. Regarding the latter interesting mechanical combination, its use had yet to be found out. Mr Matthey, as it might be noticed, had devoted his ingenuity not to using its peculiar properties, but to neutralising these. When he (Mr Napier) was a boy, he remembered seeing the gyrostat tried as a clinometer, but in this connection it had long been superseded by the familiar short pendulum. About twenty-five years ago, when the steamer "Bessemer" was on the stocks, the designer of that vessel, under the idea that the gyrostat in rotating preserved a horizontal plane, worked out an application of it to control automatically the valves in connection with the hydraulic rams that regulated the movement of his swinging saloon. This arrangement was fully illustrated and described in *Engineering* at the time. It drew forth not a little ridicule from others who understood the matter better, and, as a fact, when the steamer was tried, the gyrostat gave place to a man with a spirit level.

Prof. A. BARR (Member) said he considered Mr Matthey's paper

a valuable one. He thought that there was a simpler proof of the formula for centrifugal force than that given by the author of the paper, and perhaps a more strict one, and with all deference to Mr Matthey's ingenuity, he would say a more elegant proof. He referred to the proof by the hodograph method. Some members might be interested in looking it up; it was easily followed. They would find it in Clerk Maxwell's small book on "Matter and Motion."*

Mr MATTHEY, in reply, thanked the members for the kind manner in which they had received his paper. He had purposely avoided the use of the calculus in his paper, because he wished to place the matter on a simple and easily understood basis, such as would be useful in any drawing office. When there were two ways of proving anything, the simpler was always the better. He understood Professor Jamieson to say that Professor Perry had given 850 feet per second as a safe circumferential speed for wrought iron.

Professor JAMIESON—It ought to be 80 feet; Professor Perry had made a mistake. It was 850 feet in his book, but it should be about 80 feet.

Mr MATTHEY—He was perfectly sure the iron would go to pieces before the speed of 850 feet was reached. By this formula the tension at that speed would be $(850)^2$ divided by 10, or 72,250. At any rate, the appeal was to reason and not to authority. He would like someone to overhaul his argument to see if there was any flaw in it.

Professor BARR—From 80 to 100 feet per second was the usual rule.

Mr MATTHEY—That was so for cast iron; 100 feet gave about 1000 lbs. per square inch, and it was perhaps wise not to exceed that for cast iron. He would run a wrought iron rim without fear at double that speed, which gave four times the tension. Even 300 feet per second, giving 9000 lbs. tension, or 4 tons, might in some cases be adopted. The statement of Professor Perry was doubtless one

* "Manuals of Elementary Science."

Mr C. A. Matthey.
of those slips which occurred in the best written books. Mr Napier referred to the gyrostat as a leveller on board a rolling ship, and had instanced the "Bessemer" saloon steamer. He (Mr Matthey) remembered that ship, and had been on board of her during a trial in the Millwall Dock, where, instead of the saloon remaining level while the ship rolled in rough water, the saloon was made to roll while the ship remained stationary in smooth water. The scheme was founded on a misapprehension. Sir Henry Bessemer was a great steel maker, but he did not at that time understand the gyrostat. Doubtless, a man of his character would master it afterwards. The "Bessemer" went on trial in the Channel in rough water; but the gyrostat utterly failed to control the hydraulic machinery which was to actuate the saloon. In consequence, the ship returned with the saloon locked by a special contrivance, provided in case of emergency. That the gyrostat possessed the property of fixity of direction was quite a mistake. The general impression seemed to be that it absolutely resisted small disturbing forces, and only yielded to forces of comparatively greater magnitude —just as a tall column, depending for its stability upon its weight, resisted small upsetting forces, but yielded suddenly when those forces reached a certain value. In an article describing the "Bessemer" steamer, in *Engineering*, of 9th October, 1874, the following statement occurred —"A heavy disc or wheel made to revolve rapidly in any given plane tends always to remain revolving in that plane, and it can only have the direction of its axis of rotation changed by the application of considerable force, the amount of this force depending upon the weight of the revolving body and its speed of rotation." The opinion therein expressed was utterly wrong. The gyrostat obeyed the very smallest couple. Not perhaps as fast as one might expect, nor in the direction one might expect, unless he had studied the subject; but the motion was inevitable. The largest gyrostat whose motion they could measure was the earth. On account of its oblate figure, and the law of attraction of inverse squares, the resultant pull of the sun did not pass through the centre of gravity of the earth, while the resultant centrifugal force

of the earth did; hence there was a couple, extremely feeble in relation to its surroundings, acting in such a way that, but for the rotation of the earth, it would bring the polar axis square to the plane of the orbit. Did the earth ignore that feeble couple? No; but owing to the rotation which constituted her a gyrostat, she did not alter the inclination of her axis to the ecliptic, but precessed in a conical motion which took no less than 26,000 years to complete one cycle. Mr Napier asked him to give a proof of the formula connecting the rates of rotation and precession.

Mr NAPIER—He simply asked him to supplement his reply in writing.

Mr MATTHEY—He would do so with pleasure. It would have made his paper too long had he included this proof, but he would give it in his written reply to the correspondence. Professor Barr had mentioned another way of proving the law of centrifugal force without using the calculus; viz., by the hodograph. Did not that consist in making a sort of supplementary diagram, in which radii corresponded to tangents in the original diagram of motion?

Professor BARR—Radii in the hodograph represent velocities of the moving body. If a diagram of velocities is so made, the radius of the hodograph goes round with that of the moving body, and then the velocity of the extremity of the hodograph radius represents the acceleration of the original moving body.

Mr MATTHEY—By that means was the use of the calculus, or the conception of limits, altogether avoided?

Professor BARR—Entirely. The proof could be found in Clerk Maxwell's "Matter and Motion."

Mr MATTHEY said he would refer to that. There was nothing like having two ways of doing a thing, and one always learned something in studying a matter from a new point of view. He thought he had now answered all the points raised in the discussion.

On the motion of the President a hearty vote of thanks was awarded Mr Matthey for his paper.

In further reply to the discussion and correspondence, Mr MATTHEY wrote as follows:—In Professor Perry's Applied

Mr C. A. Matthey.

Mechanics he found that 850 feet per second was seriously meant as a safe speed for a wrought iron wheel, and the tension, 6000 lbs., as that was quite consistent with the formula given; namely,

$$\text{Tension} = \frac{\cdot 28\, v^2}{g}.$$

Professor Perry's formula was undoubtedly wrong; the multiplier 12, the number of inches in a foot, had been omitted. The centrifugal force of a square inch of rim should be multiplied by the radius in inches, not in feet, to arrive at the shell tension, just as in the case of boilers. To give 6000 lbs. tension per square inch the linear speed should be about 245 feet per second. With regard to the proof of the formula connecting the rates of rotation and precession, which he promised Mr Napier at the last meeting, he would first mention that he had been asked by several individuals to explain why it was that the gyroscope behaved in apparent defiance to the law of gravitation. Why did it not fall down when supported on a point not in the same vertical line as its centre of gravity? And, why did it move in a direction at right angles to that of an impressed force, in apparent contradiction to the second law of Newton? It should be borne in mind that a body could not acquire a rotation about any axis without being acted on by a couple about that axis; nor, if such rotation existed, could it be increased or diminished, except by an accelerating or retarding couple about that axis. Fig. 11 showed a simple form of gyroscope, consisting of a heavy wheel revolving about a horizontal non-rotating axle, of which one end rested on a fine point. To ensure stability, the point of support was placed a little above the centre of gravity when the axle was horizontal. The plane of the paper, OX OY, was supposed to be vertical, the third co-ordinate axis, OZ, being horizontal and perpendicular to the paper. The couple caused by the weight of the top and the reaction of the support was shown by the circle passing through the point of support and the centre of gravity, while the arrow indicated the direction of the couple. This couple, about an axis parallel to OZ, might be called an OZ couple. Now, if, while the wheel was spinning, the axle obeyed

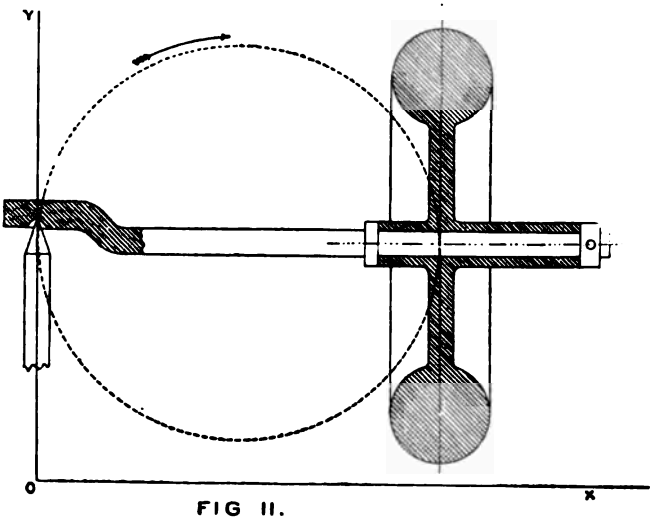

FIG 11.

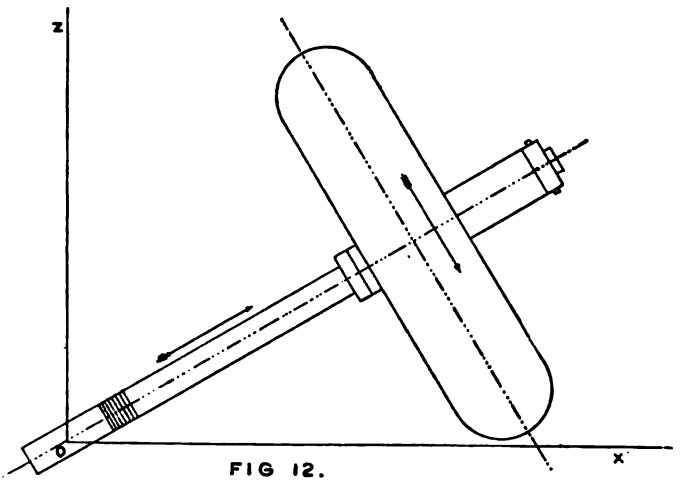

FIG 12.

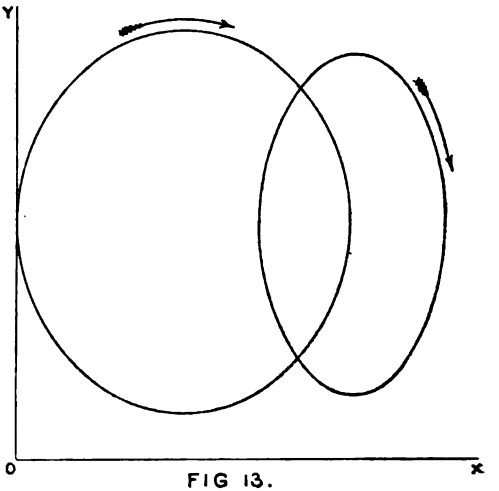

FIG 13.

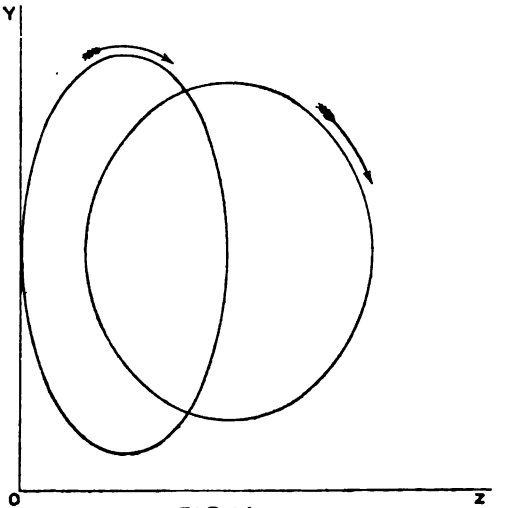

FIG 14.

the couple by descending in the plane OY OX (as everyone expected it to do until he was better informed), they would have the absurdity of a rapid rotation of the wheel about OY, *acquired without any couple about that axis.* That could not be, and so the system obeyed the OZ couple by precessing, or rotating its axle in a horizontal plane so as to acquire an OZ rotation. At the same time it would lose part of its OX rotation, because the total rotation about its own axis remained unchanged. He would endeavour to explain where the couple which diminished the OX rotation came from. Fig. 12 showed a view on the plane OX OZ—viz., a plan, the top having precessed through a certain angle from its position in Fig. 11. The two arrows showed respectively the motion of the upper half of the wheel and the upper half of the circle representing the gravitation couple. The gravitation couple in a vertical diagonal plane might be resolved into two component couples about OX and OZ, and the rotation of the wheel into two component rotations about OX and OZ. By projecting the circle representing the the gravitation couple, and a circle representing a section of the wheel on the plane OX OY, and drawing arrows on the ellipses so obtained to show the rotations, Fig. 13, it would be seen that the rotations were concurrent. If the circles were projected on the plane OZ OY, it would be seen that the rotations were opposite, as in Fig. 14; or the OZ component of the couple increased the OZ component of the rotation, while the OX component of the couple diminished the OX component of the rotation. The effect of the couple was, therefore, to turn the axle of the wheel round horizontally, so that it continually gained OZ rotation and lost OX rotation. Mr Napier asked how the formula $C = \frac{WK^2 \Omega\omega}{g}$, giving the speed of precession, was arrived at. Conceiving a thin ring of 1 lb. weight and 1 foot radius, to be acted upon by a couple composed of two opposite tangential forces of ½-lb., Fig. 15; namely, by unit couple, then it followed from the law of linear acceleration that the mass of 1 lb., acted on by a force of 1 lb., would acquire a linear velocity of g feet per second in one second, or, since the radius

was a foot, an angular velocity of g radians. To produce Ω radians per second, a couple of $\frac{\Omega}{g}$ was required.

If the weight were changed from 1 lb. to W lbs., the couple was

$$\frac{W\,\Omega}{g}$$

If the radius were changed to K feet, the couple required was

$$\frac{W\,\Omega\,K^2}{g};$$

because the *vis viva* of the ring was as the square of the linear speed, or as the square of the radius for given Ω. This, then, was the

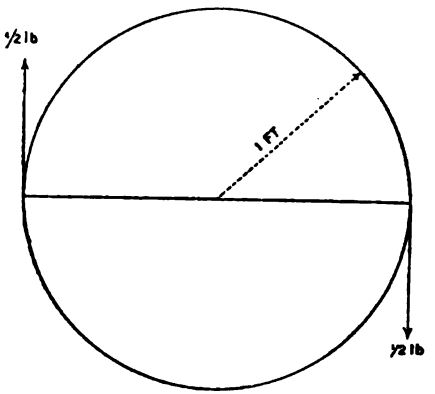

FIG 15.

couple required in feet and pounds to produce an angular velocity Ω in a body of weight W and radius of gyration K; because, so far as angular accelerations were concerned, the body behaved exactly as if all its mass were concentrated in a ring of radius K. It would be seen that during one quarter of a revolution of precession of the gyroscope, Fig. 12, it commenced with all O X rotation and no O Z rotation, and finished with all O Z and no O X rotation; so that during the time required to precess through a quadrant, the whole of the O X rotation had been destroyed. If the quadrant was traversed in one second, what couple would be required? The

couple $\frac{W\,\Omega\,K^2}{g}$ would destroy (as it could produce) the rotation in one second, if applied directly to the axis of rotation of the top; but, it should be remembered that it was a varying component of the gravitation couple which destroyed the O X rotation, and not the full couple continually acting. The estimation of this varying effect lay within the legitimate province of the integral calculus. But it was an integral problem of so elementary a nature, and had so many analogies which were accepted without question, that it might be accepted that the couple whose varying component would destroy the O X rotation, and so produce a quarter of a circle of precession per second, would be greater than the above couple in the ratio of the length of the quadrant-arc to the radius; or the couple necessary for $\frac{\pi}{2}$ radians of precession per second $= \frac{W\,\Omega\,K^2}{g} \times \frac{\pi}{2}$. Therefore, to produce precession at one radian per second required a couple equal to—

$$\frac{W\,\Omega\,K^2}{g} \times \frac{\pi}{2} \div \frac{\pi}{2} = \frac{W\,\Omega\,K^2}{g}.$$

Which meant that—*The couple which would produce the rotation Ω in the body in one second would, if applied in a plane perpendicular to the rotation, produce one radian of precession per second.* Therefore, to produce precession at the rate of ω radians per second required a couple—

$$C = \frac{W\,\Omega\,K^2\,\omega}{g}.$$

As an integral problem very similar to the above, he would quote the calculation of the tension on an inch-length of the shell of a circular boiler. Everyone knew that the tension was obtained by multiplying the pressure per square inch by the radius, and not by the length of the quadrant arc; though the latter was the measure of the total force involved. That question was so familiar that one was apt to forget it was a matter of integration. The components of the pressures on small areas in a certain direction round the quadrant was summed up, and that summation or integration was equal to the pressure per square inch multiplied by the radius. So again in

Mr C. A. Matthey.

the matter of centrifugal force. In the paper that was arrived at by considering distance traversed in a certain direction in bringing a body to rest in that direction. But the time required to bring it to rest in that direction might have been considered. The momentum $\frac{W v}{g}$ would be destroyed in one second by the force $\frac{W v}{g}$, directly opposing the body; and the motion in any direction would be destroyed by the tension of the string, Fig. 1, during the time taken to describe $\frac{\pi}{2}$ radians. Yet a centrifugal force of $\frac{W v}{g}$ would not rotate the momentum $\frac{W v}{g}$ at $\frac{\pi}{2}$ radians per second, but only at one radian per second. To rotate it at ω radians per second required a perpendicular force of $\frac{W v}{g} \times \omega$ or since $\omega = \frac{v}{r}$ a force of $\frac{W v^2}{g r}$.

From Clerk Maxwell's "Matter and Motion," the hodograph appeared to have been invented by Sir W. R. Hamilton for the analysis of cases of varying radius, varying linear velocities, and varying centrifugal forces—notably the case of a planet in an elliptic orbit For these advanced problems it was an elegant and useful method of proof. But he could not agree with Professor Barr that it furnished a good proof of centrifugal force. Clerk Maxwell summed up thus—"Hence when a body moves with uniform velocity in a circle, its acceleration is directed towards the centre of the circle, and is a third proportional to the radius of the circle and the velocity of the body." Now these three quantities, the acceleration, the radius, and the velocity, were, to the ordinary mind, incommensurable. He maintained that it was vastly simpler and more comprehensible to say—"*The centrifugal force was twice the uniform retarding force which would bring the body to rest in a distance equal to the radius.*"

Regarding the remarks of "A Member" on the gyrostatic action of screw and paddle shafts, he did not think the gyrostatic forces could be held accountable for the breakage of shafts, nor that as a rule they were considerable compared with the stresses caused by the effort of the steam on the pistons. He should like to give a numerical example

from practice, but he had no data as to the maximum rate of rolling or pitching. Nor had he at hand the weight and radius of gyration of a screw or paddle system. To fix the ideas, however, the whole weight of a paddle-wheel with its shaft and crank might be conceived to be concentrated in the circle passing through the centres of the hinges of the feathering floats, and the couple which would accelerate this ring to full speed in one second calculated, the wheel revolving in air instead of water. Then if in a sea-way the ship rolled at one radian per second, an equal couple would act to turn the shaft round in the plane of the deck, which would be resisted by the outer engine bearing and the bearing on the side of the ship. For any less velocity of roll than one radian (about 57°) per second, the couple would be proportionately less. Where the gyrostatic forces became serious on board ship, was in high speed fans, dynamo machines, and centrifugal pumps. The time had come, in these days of high speeds, when the gyroscope should be recognised and understood in every drawing office, and the mystery which seemed to surround it dispelled. The great mathematical writers on mechanics, like Poisson and Routh, talked over the heads of most engineers. Routh did not condescend to give a *précis* of his argument, but plunged at once into a differential equation. See "Rigid Dynamics," chap. iii., Part I., "Motion about a Fixed Axis," and chap. x., Part I., "Motion of a Top." Also chap. xi., Part II., "Precession and Nutation." Poisson, of whose work, "La Mécanique," there was an English translation in the Library of the Philosophical Society, enunciated what he intended to prove. In the index was the following statement:—"If the axis of figure be made to deviate from the vertical, and if, after a rotary motion is impressed on the body about this inclined line, it is then remitted to itself, the motion of the ascending node will be direct or retrograde according as the centre of gravity is situated above or below the horizontal plane passing through the fixed point." The expression "ascending node" was defined in the text. The meaning of the passage was that, as stated in his paper, the precession would be with the

rotation if the body was supported below its centre of gravity, and contrary to the rotation if the body was supported from above. But so far as he could find, neither Poisson nor Routh went into the question of the effect of a second couple tending to accelerate or retard the precession. If it was in their works, it was wrapped up in mathematics which he could not follow. Since reading his paper, he had discovered* that Mr Edmund Hunt had demonstrated the properties of the gyroscope in the clearest and most unmistakeable manner, with a drawing of a form of gyroscope, and diagrams of motion. His investigation was admirably thorough, and he distinctly stated that retardation of the precession caused the centre of gravity to fall, and *vice versa*. It was this property which concerned the maker and user of centrifugal machines, and was the only excuse for introducing the gyroscope into a paper on a subject which at first sight appeared to have nothing in common with that instrument.

---

*Proceedings of the Glasgow Philosophical Society, Vol. IV.

THE MACHINERY OF THE CLYDE TRUSTEES' No. 3 GRAVING DOCK.

By Mr George H. Baxter (Member).

(SEE PLATES XIII., XIV., XV., XVI., XVII., XVIII. AND XIX.)

Read 21st March, 1899.

As no paper dealing with the machinery and equipment of a graving dock has hitherto been read before this Institution, it has been thought that it would be interesting to the members to have a paper on this subject in connection with the third and last graving dock constructed by the Clyde Trustees at Govan.

This dock is at present one of the largest of its kind in the world, and is capable of accommodating the largest vessels afloat. The machinery for pumping it out is in like proportion, and is probably the most powerful of its kind applied to this purpose, Figs. 1 and 2.

The dock lies to the south of No. 2 dock, parallel to Govan Road, and is entered from the new Princes Dock. The principal dimensions are as follows:—

Length of floor, ...	880′	0″
Width of „	81′	8″
Width at top, ...	115′	0″
Width at entrance, ...	83′	0″
Depth of water on sill at average high water of spring tides, ...	26′	6″

The floor of the dock is 2 feet below the sill at outer entrance.

When no vessel is in the dock, and with a tide 26 feet 6 inches above the sill, its capacity, or quantity of water to be removed, is about 13¾ million gallons, 2,202,000 cub. ft. or 62,914 tons, which, in accordance with the specified test, had to be emptied in not more than two hours after commencing to pump at the top of high

water, at the end of which time the tide outside the dock was expected to fall 4½ feet.

EQUIPMENT, ETC.

Division Gates.—The dock is divided by a pair of steel hinged gates into two parts, the inner division being 420 feet, and the outer 460 feet long. These gates weigh 170 tons, and each is 46¾ feet long, 33¼ feet high, and 5¾ feet wide at the centre. They are hinged at one end and supported at the other by a cast steel roller 38 inches in diameter, running on a cast steel roller path 9 inches wide, bedded into granite blocks flush with the floor of the dock, Figs. 3 to 7.

The leading dimensions are:—

Width within walls, ...	83′	0″
Width between centres of heel posts,... ...	87′	0″
Radius of hollow quoins, ...	1′	6″
Distance from centre lines of heel posts to apex of meeting sill, ...	16′	7⅜″
Height of roller path floor to surface of cope of side walls, ...	32′	9″
Height from sill level to surface of cope of side walls, ...	30′	9″

The gates are built of mild Siemens-Martin steel, tested under Admiralty conditions. The thickness of plating ranges from ⅝-inch at bottom to ⅜-inch at top. Each gate is divided by a ⅜-inch steel plate deck (No. 7) into two parts, the lower being an air chamber and the upper a water compartment. The bottom deck (No. 1) is stiffened on the underside by diaphragms carried down to the bottom of the gate, while the plate deck (No. 7) at the top of the air chamber is stiffened on its underside by T-bars and bracket-knees to the shell. An intermediate plate deck, (No. 4) similarly stiffened, is introduced between the top and bottom decks of the air chamber. A water-tight trunk way, leading from the top of the gates, gives access to the air chamber.

Besides the intermediate plate deck referred to, there are four

braced decks (Nos. 2, 3, 5 and 6) in the air chamber formed of T-bars 6 inches × 5 inches × $\frac{11}{16}$-inch, riveted to the shell and cross-braced with similar T-bars, 5 inches × 3 inches × $\frac{3}{8}$-inch.

Above the air chamber there are three similar braced decks (Nos. 8, 9, and 10) with $\frac{3}{8}$-inch bracket plates at the ends and in way of air trunk, while above these is the $\frac{3}{8}$-inch steel plate top deck (No. 11), the underside of which is stiffened by T-beams with knees. At the heel post end the deck top is of 1-inch plate to take the pivot forging. At the heel and meeting post ends solid bracket plates $\frac{3}{8}$-inch thick are introduced. Suitable entrance manholes are provided in the top, bottom, and intermediate decks.

The three cross bulkheads extend from the bottom to the top of each gate. Diaphragm plates, having a manhole in the centre, are introduced between the bottom and the bottom deck (No. 1) as well at the heel and meeting posts between the top braced deck (No. 10) as and the top deck (No. 11) of the water compartment.

The bottom is formed of $\frac{5}{8}$-inch steel plates, with an angle $4\frac{1}{2}$ inches × $4\frac{1}{2}$ inches × $\frac{5}{8}$-inch, caulked water-tight all round. The plate which takes the heel post socket is 1-inch thick. The rivets are of iron, closed where practicable by hydraulic pressure. All butts have double riveted single straps $\frac{1}{16}$-inch thicker than the plates they cover, while the seams of the plating are all double riveted.

The meeting post is formed of $\frac{3}{4}$-inch plating, with double angle bars $4\frac{1}{2}$ inches × $4\frac{1}{2}$ inches × $\frac{3}{4}$-inch all round. The heel post is made of 1-inch plates, with a single angle bar all round, 5 inches × $4\frac{1}{2}$ inches × $\frac{3}{4}$-inch. At the centre of the heel post is introduced a feather plate, 15 inches × 1 inch, with double angles, 6 inches × $4\frac{1}{2}$ inches × $\frac{7}{8}$-inch, well bracketed to the 1-inch plate which takes the pivot socket.

The wood meeting posts are of American white oak, in two pieces, about 14 inches × $10\frac{1}{2}$ inches, and are in one length from top to bottom, secured to the plates of the meeting post by $1\frac{1}{4}$-inch bolts 2 feet 6 inches apart, and to each other by $1\frac{1}{4}$-inch bolts 5 feet apart.

The sill timber is of American white oak, 14 inches × 6 inches, in

two pieces in the length, with butt joints. It is carefully scarphed into the heel and meeting posts, and secured to them and to the shell by $1\frac{1}{4}$-inch bolts.

The heel post timber is of American white oak in two pieces, rounded to fit the hollow quoins, and secured in the same way as the timber of the meeting posts.

Four cast iron scuppers, 4 inches in diameter, on the round side of each gate, are led from the shell to the water-tight deck at the top of the air casing, so that when the water outside reaches this level it will flow inside and prevent the gates lifting off the pivot. These scuppers have a taper at the shell end into which plugs may be driven if the gates should require to be floated.

A platform of 3-inch English oak is laid on a level with the cope of the side walls, having gunwale timbers of English elm carried round on T-iron cross pieces, and checked for planking. Suitable framed scuttle hatches, with necessary lifting rings, are provided for admission to the trunks, hydraudic machinery, and manholes. Two $\frac{5}{16}$-inch chains, with stretching screws at one end, are carried by portable wrought iron stanchions, on each side of the platform. The stanchions rest in cast steel sockets, and are made to fold down to the platform level.

The bottom pivot is of cast steel, 12 inches in diameter and $3\frac{1}{2}$ inches thick, well ribbed, and sunk $3\frac{1}{2}$ inches below the flush. The top of the pivot is machined and rounded to a radius of 2 feet. The socket is of cast steel, $3\frac{1}{2}$ inches thick, secured to the bottom of the gate by turned and fitted bolts. It is machined out to take a forged steel bush, on which the gate revolves, the bush being held in place by three wedge-shaped keys. The lower surface of this bush is hollowed to a radius of 2 feet 4 inches.

The roller path, 9 inches wide, is of cast steel, having a flat upper surface, raised slightly above the level of the masonry. It is made in interchangeable lengths with V-jointed butts, resting on plates 30 inches long by 20 inches wide and $1\frac{1}{2}$ inches thick, and secured to the granite bed by $1\frac{3}{4}$-inch Lewis bolts. The radius of the roller-path is 39 feet 9 inches from the centre of the heel post.

The roller is solid cast steel, 2 feet in diameter at the centre and 9 inches broad on the bearing surface, and is bevelled to suit the 39 feet 9 inches radius of path. The axle is of wrought steel, 8 inches in diameter, turned with a slight taper and pressed into the roller by hydraulic pressure. The roller carriage is also of cast steel, to suit the roller, and has a gun metal upper bush, the lower bush being of wrought iron, tapped on. The carriage is kept in place by a wrought iron spear 5 inches in diameter, carried up to about 5 feet from the bottom of the gate, and is tightened up at the top by wedges. The brackets at the top, which take the thrust of the spear, and the bottom-keep brackets, are of wrought steel plates and angles. Wrought steel scrapers are fitted to the back and front of the roller to clean the path in front of it.

The main piece at the anchorage is of cast iron, secured to the masonry by strong wrought iron bolts and nuts, provision being made in casting to take the ends of the tie-rods and main piece of the hydraulic girder attachment. The top pivot is of forged wrought iron thoroughly secured to the deck plating, which is stiffened very strongly at that part.

The machinery, Fig. 8, for working each half of the division gate, consists of a double acting hydraulic cylinder 14 inches in diameter, and 11¼ feet stroke, with a piston and steel piston rod acting on a crosshead and connecting-rod attached to the gate. The crosshead is of steel fitted with keeps and forged steel gimbal, so that the rod may be free to move either horizontally or vertically. The connecting-rod is provided with keeps and straps for attachment to the lever on the top of the gate. This lever is introduced in order to reduce to a minimum the thrust on the hollow quoin due to the action of the hydraulic cylinder, and is hinged at its inner end to a wrought iron plate 5 inches thick bolted to the anchor block, while at the outer end it is connected to the gate.

The hydraulic cylinders are each placed in a shallow pit on either side of the dock immediately under the cope of the quay, and the whole is covered over with ribbed steel plates flush with the ground.

Caisson.—At the outer entrance the dock is closed by means of a

rectangular steel caisson, Figs. 9 to 11, 90 feet long, 30½ feet high, and 15¾ feet wide, with a folding bridge capable of carrying 30 tons, which with its handrails is raised and lowered automatically by a parallel bar arrangement, thus permitting it to pass under the roof of the caisson chamber.

The caisson is divided by a water-tight deck into two compartments, the lower being an air chamber and the upper a water-ballast chamber, as in the division gates.

The structure weighs 465 tons, which, with 240 tons of ballast inside, makes a total of 705 tons. It has a displacement of about 33 tons per foot, and with water on both sides would float at a draught of about 20½ feet, or with a draught of about 19¼ feet on the sill. As the tides sometimes exceed 30 feet above the sill, in order to prevent the caisson floating, water-ballast is allowed to flow into the upper or water-ballast chamber, as the tide rises, through the sinking valves. With such a tide a depth of 10 feet to 11 feet of water would be required in the upper chamber to maintain the caisson in position.

The sinking valves are on a level with the water-tight deck, from which cast iron bends are led to the sides of the caisson below the deck. Rose-boxes are secured to the lower ends of these pipes to prevent chips entering. The valves and seats are of gun metal, and the valves are worked from the folding bridge. The meeting faces are of American white oak, and it is worth remarking that so truly dressed were the granite meeting face and the meeting face of the cassion, that when the water was pumped out of the dock for the first time on 8th March, 1898, with the caisson across the entrance the joint was found to be perfectly water-tight.

There are two entrance tubes, of 2 feet 6 inches diameter, to give access to the air chamber, placed in such a position as to clear the folding bridge when down. Each tube is fitted with a manhole and cover, and a ladder extends from top to bottom of the caisson.

The caisson is built of steel plates, varying from ⅜-inch to ⅝-inch thick, the sides being stiffened with angle iron frames, 3 inches × 3 inches × ½-inch, spaced 18 inches apart, and reverse bars on every

alternate frame, 3 inches × 3 inches × $\frac{3}{8}$-inch. The floors on the bottom are 30 inches deep by $\frac{1}{2}$-inch thick. The water-tight deck is carried on angle iron beams, 5 inches × 3 inches × $\frac{1}{2}$-inch, having brackets securing the ends to vertical iron frames.

Below the water-tight deck the cross beams are 4 inches × 4 inches × $\frac{1}{2}$-inch, while those above that deck are $3\frac{1}{2}$ inches × $3\frac{1}{2}$ inches × $\frac{1}{2}$-inch, and 3 inches × 3 inches × $\frac{1}{2}$-inch, secured to vertical frames with gusset plates $\frac{3}{8}$-inch thick. The dimensions of the vertical supports for the water-tight deck, secured to each cross beam, are $3\frac{1}{2}$ inches × $3\frac{1}{2}$ inches × $\frac{3}{4}$-inch below, and 3 inches × 3 inches × $\frac{1}{2}$-inch above. Stringer plates, five in number, on each side below the water-tight deck, are 18-inches broad × $\frac{3}{8}$-inch thick, while above, three on each side are 15 inches × $\frac{3}{8}$-inch, and the uppermost 20 inches × $\frac{3}{8}$-inch—all connected to the beams and frames by gusset-plates, and to the sides by double angle irons. The caisson is braced diagonally by flat iron bars 4 inches × $\frac{3}{4}$-inch, firmly secured to the frames, cross beams, and gussets.

The caisson is provided with two steel bar keels 8 inches by 4 inches, which run upon 44 cast-steel rollers 18 inches in diameter, The spindles of the rollers are bushed with gun metal, carried in boxes of cast-iron, built into brickwork in the floor of the caisson chamber and berth. Each line of steel bars has four curved swells on the outer edge to prevent the timber-facing pieces being abraded against the granite when the caisson is in motion.

In the construction of the folding bridge there are two lines of beams, placed about 6 feet apart, formed of I-iron 12 inches × 6 inches, with a 7-inch × $\frac{3}{4}$-inch plate at the top and bottom. The outer girders are 12 inches deep × $\frac{1}{2}$-inch, with angles $3\frac{1}{2}$ inches × $3\frac{1}{2}$ inches × $\frac{1}{2}$-inch on the bottom, and T-iron 6 inches × 3 inches × $\frac{1}{2}$-inch on the top. These girders are supported on cross beams formed of two channel irons 6 inches × $3\frac{1}{2}$ inches × $\frac{1}{2}$-inch, with a $\frac{3}{8}$-inch plate at the top and bottom. To the under side of the cross-beams are secured the forty plumber blocks, in which work the ten 4-inch cross shafts which carry the whole weight of the folding bridge. These shafts are reduced at the ends to $2\frac{3}{4}$ inches diameter

to receive railing stanchions and parallel motion bars. There are ten similar cross shafts working in similar plumber blocks bolted to the top of the caisson, and short levers are keyed to these shafts, the upper ends of the levers being bushed to take the shafts under the folding bridge. Kentledge boxes are provided to partially balance the weight of the bridge when down.

A large cast iron beam curved vertically on the face is fixed to the mouth of the caisson chamber, and, when the caisson is closed, the folding bridge is close to this beam. As the caisson is hauled in, the folding bridge bears on, and slides down the face of this beam until it rests on three pitch pine bearing blocks and six cast iron stools, faced with india-rubber, $\frac{3}{4}$-inch thick, fitted into a recess on the top end and bolted to the stringers.

At the outer end of the folding bridge on each side is a $9\frac{3}{4}$-inch diameter cast steel nosing roller, which works against a cast iron curved raising plate, which abuts against a recess in the cope of the side wall. As the folding bridge when down projects beyond the face of the caisson, the roller comes in contact with the raising plate, and as the caisson is hauled into its position the folding bridge rises to the level of the cope of the side walls at the entrance, forming a level road, while, at the same time, the hand rails are raised by means of lever stanchions connected with the parallel bars.

The caisson is worked out and in by a direct-acting reversible hydraulic hauling engine, Figs. 12 and 13, having four gun-metal rams each 5 inches in diameter and 12 inches stroke. The rams work on two cranks, and through gearing up to a main shaft, prolonged into the caisson chamber, on which are keyed two pitch chain pulleys. Over each of these pulleys is carried an endless chain extending the whole length of the caisson chamber, supported by 22 cast iron rollers on each side. Passing round a pulley at the outer end the chain is secured to either extremity of the yoke by shackles and pins $2\frac{1}{4}$ inches in diameter. Stretching screws are fitted for taking up any slack in the chain.

The yoke is composed of steel channels 6 inches × $3\frac{1}{2}$ inches × $\frac{3}{4}$-inch, and two $\frac{7}{8}$-inch plates at the top and bottom. Each plate

has a boss $1\frac{5}{8}$ inches thick at the ends, bored out to receive $2\frac{1}{4}$-inch connecting pins; and two thickening plates at the centre, bored out for a 5-inch swivel bolt, which is secured to the hauling bracket on the end of the gate. The time occupied in hauling the caisson the required distance of $98\frac{1}{2}$ feet is five minutes. A suitable capstan head and gearing is provided for working the caisson out and in by hand should the hydraulic power not be available.

Hydraulic Warping Capstans.—Five hydraulic capstans, each capable of pulling with a strain of 5 tons, are provided for warping vessels in and out of the dock. One is placed at the head of the dock, one on either side at the middle, and one on either side of the entrance. Each of the capstans is worked direct by a three-cylinder hydraulic engine having rams $5\frac{3}{4}$ inches in diameter, and 14 inches stroke.

Filling Culverts.—The dock is filled with water through two culverts, each 7 feet 4 inches by 4 feet, constructed in the side walls of entrance and caisson chamber, and by a third culvert 6 feet by $3\frac{1}{2}$ feet leading from the main discharge culvert into the sump under the engine-house and thence into the dock. The pumping station is situated at the south-east corner of the dock near the entrance, the boiler-house adjoining at the west side of the engine-house. The sump referred to, the top of which is about level with the floor of the dock, is 61 feet long by 12 feet broad by 11 feet high, and is constructed under the floor of the engine-house.

The water from the dock is led by one large and two smaller culverts into the sump. The central culvert is 10 feet by 6 feet, and leads from the outer division, while the other two culverts are each 6 feet in diameter, one being constructed on the north and the other on the south side walls of the dock, the north culvert crossing under the floor of the dock to the south side.

These two 6 feet culverts lead the water into the sump from the inner division. They are also used for filling it, and are provided with twenty-nine air pipes 6 inches in diameter, spaced at regular intervals, and led up to the surface to allow air to escape when water is admitted.

All the culverts are provided with sluice valves so arranged that the water in the whole of No. 3 Dock, or from either division, can be led into the sump and pumped out through the main discharge culvert which is 11½ feet high by 8 feet broad.

The area of the seven inlets to the culverts formed in the sides and floor of the dock is 730 square feet. Each inlet is provided with heavy wrought iron bar gratings covered with wire netting to prevent rubbish and chips finding their way to the pumps. The total capacity of the culverts up to the floor of the dock is about 250,000 gallons or 1,120 tons.

Culvert from No. 3 to No. 2 Graving Dock.—A branch culvert 3 feet in diameter has been constructed from the 6 feet culvert on the north side of No. 3 Dock communicating with No. 2 Dock, an arrangement which has effected a very great improvement in the working of the latter. Formerly—in pumping out No. 2 Dock, owing to the position of the 5 feet diameter culvert leading to the old pumping machinery at No. 1 Graving Dock—after the water got below the level of the 5 feet culvert, the drainage pump at No. 2 Dock had to be brought into operation to remove the 3 feet of water remaining in the dock. This drainage pump was worked by a Crossley gas engine, and it frequently took longer to discharge the remainder of the water in No. 2 Dock than the old pumping machinery did to reduce the water to the level of the keel blocks.

Now, owing to the new connection either No. 1, or No. 3, or both sets of pumping machinery can be utilised for No. 2 Graving Dock, and not only is it thus emptied much more quickly, but the long delays at the finish have been altogether avoided. This has much enhanced the value of No. 2 Dock, and is an improvement which is no doubt fully appreciated by surveyors and superintendents of steamers using it.

Hydraulic Power.—The whole of the sluices, about 14 in number, together with the capstan engines, rams for division gates, and hauling engine for caisson, are worked by hydraulic power, and are supplied with water at a pressure of 700 lbs. per square inch from a line of piping 5 inches diminishing to 4 inches in diameter, led

from the high pressure water service which is carried round all the quays of Princes Dock. A connection is also made with the hydraulic pressure pumping engines at No. 1 Graving Dock, so that in the event of a stoppage on the one system the other can be used if required.

25-Ton Steam Travelling Crane.—A 25-ton steam travelling crane with fixed jib, Fig. 1, mounted on a strong steel carriage having a rail gauge of 24 feet 9 inches, with a clear headway of 14 feet 6 inches from top of rails to under side of cross girder, is provided on the north side of dock. It is capable of travelling by its own power with the jib in any position, with a test load of 30 tons, on a set of double rails extending the whole length of the outer division and beyond the division gates, so as to make the crane available for either division. The rake is 74 feet, the range of lifting block from 35 feet below to 50 feet above the cope, and the centre of block will project 61 feet from the face of cope, or 3 feet 6 inches beyond the centre line of dock. The driver's house is so arranged that he can always see the bottom of the dock.

Pumping Machinery.

The pumping station, as already mentioned, is at the south-west corner, on the west side of the entrance, and consists of an engine house and boiler house, Figs. 17 and 18.

The machinery is bedded on a massive foundation of bricks and cement, constructed over the sump already described. The engine house floor is 18 feet below the level of cope of the dock side walls, and 14 feet 9 inches above the floor of the dock. The extreme length is 61 feet, and the breadth 23 feet. The floor of the boiler house from which the boilers are fired is level with the cope of the dock side walls.

Pumps and Connections.—The main pumping machinery consists of two pumps, Figs. 14, 15, 16, of the centrifugal type, each having two suction pipes 44 inches in diameter, and one discharge pipe 60 inches in diameter. The pump discs are each 8 feet in diameter, the extreme depth of pump casings 12 feet 3 inches, and width of each

pump over all 16 feet 9 inches. The centre of the disc is 17½ feet, and the top of casing 23 feet above the floor of the dock at side.

The four suction pipes are led through the foundation into the sump, and terminate with bell-mouthed ends, at a level of about 5 feet below the floor of the dock. These pipes are carefully grouted around the outside, where they pass through the foundation, with cement well packed in, and made thoroughly water-tight; two check rings of cement into the foundation being provided to each suction pipe.

The upper halves of the pump casings, with the outer covers over the shaft, are so constructed as to be easily removed for overhauling without disturbing the suction or discharge pipes. The lower parts of the pumps have strong brackets cast on them, and are connected by turned and fitted bolts to the bed plates of the engines. The pump-spindles are of mild ingot steel, 8 inches in diameter, lined with gun metal at the bearings.

A sluice valve of 60 inches diameter is fitted to the discharge branch of each pump, to which the main discharge is bolted. These cast iron pipes are in short lengths, with flanges faced and bolted together, embedded in and led through the concrete wall of the dock into a large chamber formed at the east end of the engine house. This chamber is open to the surface of the ground at the dock entrance, and covered with cast iron chequered plates. On the end of each discharge pipe is fitted a balanced flap-valve constructed of two layers of elm timber bound with iron, hinged on phosphor bronze pins, and arranged so as to be adjustable from the top of the chamber.

In dry dock pumping machinery where centrifugal pumps are employed, and the discharge pipes are below the level of the water outside, it is advisable to have such valves fitted. They should be so balanced as to remain closed when the pumps are not working, but to open and close quite easily. Besides facilitating the re-starting of the pumps when they have to be stopped, by keeping back the great bulk of the water outside until the pumps overcome the pressure on the back of the valves, they also serve the purpose of

preventing the water rushing back through the pumps into the dock should the engines be stopped before the sluice valves on the discharge branches of the pumps could be closed. If this ever occurred the effect would be to reverse the engines with great rapidity, and might result in serious damage. Moreover, if the discharge-valves on the pumps were closed quickly after the back rush had begun, and balanced valves were not provided on the ends of the pipes, the arrested momentum of such a large body of water, flowing with a velocity of perhaps from 40 to 50 feet per second, would cause it to rush up through the discharge chamber and, by compressing the air therein, would probably blow the cast iron covering plates over the roof of the engine house.

This actually occurred once in the case of a large graving dock which did not have such valves provided at the time. Needless to say they were afterwards supplied.

On each pump a steam ejector of the ordinary type is fitted, to exhaust the air in the pump casings and suction pipes when the pumps have to be stopped, after the level of the water has been reduced below the top of the pump discs. The discharge from these ejectors is led into the discharge chamber. A water-gauge is also provided on each pump to show when the casings are full.

ENGINES.

There are two pairs of engines of the inverted direct-acting high-pressure expansive type Figs. 17 and 18, one pair driving each pump, the crank shafts being coupled direct to the pump-spindles. The cylinders are each 28 inches in diameter, with a stroke of 24 inches, and are made to suit a working pressure of 110 lbs. per square inch, and a maximum speed of 118 revolutions per minute. They are all steam jacketed round the top, sides and bottom, and covered with asbestos non-conducting composition and planished steel sheets.

To each cylinder expansion-valves are fitted, adjustable from the floor of the engine-room, and a graduated plate on each engine shows the rate of expansion. All the working parts of the engine are of mild ingot steel.

In such large centrifugal pumps it is a point of some importance tending to increase their efficiency that the discs should revolve with a steady uniform motion, and to this end balance weights are fitted to the cranks, and the fly-wheels are cast with a heavy side to counteract as far as possible the momentum of the working parts.

Auxiliary Pump.—Besides the two main pumps, an auxiliary pump, with disc 4 feet 4 inches in diameter, and suction and discharge pipes of 15 inches diameter, is provided, for the purpose of draining the culverts and pumping out leakage or drain water. This pump is placed considerably lower down than the main pumps in a recess in the engine-room. The suction-pipe is led below the lowest part of the sump, several feet below the level of the bottom of the culverts, and an automatic retaining valve is provided at the lower end and surrounded by a large perforated grating to prevent chips or rubbish entering. The discharge pipe is led into the main discharge chamber, and is fitted on the end with a balanced clack-valve of cast iron, adjustable from the ground level above. An ordinary stop valve is provided on the discharge branch. The pump is driven by an inverted direct-acting engine, having a single cylinder 14 inches in diameter by 12 inches stroke, the crank shaft being coupled direct to the pump-spindle. The maximum speed is about 230 revolutions per minute. This pump is also available for draining No. 2 Graving Dock through the new culvert, thus dispensing with the use of the gas engine there.

Boilers.

It was estimated that when working at full power, under the test load, the boilers, Figs. 19 to 23, would require to be capable of evaporating at the rate of 50,000 lbs. of feed-water per hour, at a temperature of 150° Fah., and at a steam pressure in the boilers of 110 lbs. per square inch. The required evaporation had to be accomplished by three boilers, while a fourth was provided as a spare boiler. The size of the boiler-house was limited to 49 feet by 33 feet, the total floor space available, and the problem was: What type and size of boilers could be got in?

In designing the boilers, consideration had to be given to the fact

that when pumping the whole dock without a ship in it, within the time specified by the test condition, the demand for steam increases as the level of water in the dock is lowered, that is, as the head of water pumped against increases, reaches the maximum when the dock is almost empty, and then suddenly ceases. To meet these conditions, and to have the means of regulating the supply of steam without having to provide boilers of large dimensions, it was decided to adopt some kind of assisted draught; and, as the chimney was in close proximity to dwelling houses on the opposite side of Govan Road, it was made a *sine qua non* that the boilers should, if possible, be absolutely smokeless.

Tenders were invited from a number of firms to supply boilers to fulfil the required conditions, and after much careful consideration had been given to each of them, it was decided to select one recommending the adoption of induced draught, chiefly on account of the simple way in which the supply of steam could be regulated, and the almost entire absence of smoke secured by this system. This has been amply demonstrated since the dock was opened, and can be seen at any time the machinery is at work.

In machinery of this kind the question of economy of fuel is comparatively unimportant, as in ordinary docking operations the pumps may not have to work for more than three-quarters of an hour, so that there is little opportunity for saving fuel in that time, more coal being frequently required to cover the bars and get up steam than to pump out the dock.

The boilers are of the marine return tubular description, three being arranged next the east wall, and one next the west wall of the boiler-house, the firing floor running between. They are each 12 feet 6 inches in diameter by 10 feet in length, and have each two Morrison's flues, 45 inches in internal diameter. The heating surface in each boiler is 1711 square feet, the bar surface 40·6 square feet, and the boilers have been constructed to stand a working pressure of 130 lbs. per square inch. They are so arranged that any one of them can be renewed without disturbing the others. The general arrangement, Figs. 19 to 21, indicates the position of the boilers and

flues. After passing into the smoke-box the gases are led downwards through iron trunks into branch flues communicating with the central main flue, which is 8 feet high by 5 feet wide. The main flue is built below the firing floor, midway between the rows of boilers, and bending at the south end is led into the bottom of the chimney.

The chimney is 100 feet high from the ground level, 5 feet square at the top, and 7 feet square at the bottom, inside.

Fans.—Near the chimney and over the top of the main flue are

Revolutions of Fans per Minute.	Vacuum shown by Water Column on Draught Gauge.		
	At Suction Casing between Fans.	At Smoke-box of Boiler nearest to Fans	At Smoke-box of Boiler furthest away from Fans.
360	$1\frac{3}{4}''$	—	—
330	$1\frac{1}{2}''$	$1''$	$\frac{3}{4}$
320	$1\frac{1}{4}''$	$\frac{7}{8}''$	$\frac{1}{2}''$
300	$1\frac{1}{8}''$	$\frac{3}{4}''$	$\frac{1}{2}''$

erected the fans and their casings. The fans are arranged on either side of a central box communicating with the main flue, the opening into which is 7 feet 8 inches by 3 feet 8 inches. The gases are drawn from the central box by the fans, and discharged into a settling tank and from thence by a passage 5 feet by 4 feet into the side of the chimney. Dampers are fitted, one at the bottom of the central box and another in the main flue, close to the chimney, so that the gases may be led either into the fans or direct up the chimney.

There are two fans, the discs of which are 8 feet in diameter, enclosed in steel casings 26 inches wide, built up on cast iron foundations. Each fan is driven direct by a separate engine having

a cylinder 7 inches in diameter by 5 inches stroke. The revolutions on trial ranged from 300 to 360 per minute, according to the varying demands made on the boilers in the course of emptying the dock.

The annexed Table gives observations of the vacuum produced by fan suction, with both fans working.

With natural draught produced by the chimney, the vacuum in the smoke-box of the near boiler was ½-inch, which is sufficient to give the quantity of steam required when only one division of the dock has to be emptied, the fans being brought into operation only when pumping both divisions, and when no vessel is in the dock.

Circulating-Pump.—The gases are washed on their way to the chimney, and the fan discs kept cool by a constant jet of water discharged into the centre of each from a pipe connected with the discharge from a duplex Worthington circulating-pump, 7½ inches by 6 inches by 10 inches, placed on the floor of the engine-house, and arranged to draw water either from the main sump or from the drainage well in the engine-room.

This pump is a useful adjunct for removing drainage from the floor of the engine-room, which otherwise might get inconveniently flooded when the water in the dock is higher than the floor.

All leakage and drain water from the engines is led into the large well on the north side of the engine-room, and can either be let into the dock when the level of water admits of this, or may be pumped out of the well and discharged through the bottom of the fan casings into the ordinary drains by the duplex pump.

Steam and Exhaust Pipes.—Steam is conveyed from the boilers to the main pumping engines in pipes of 14 inches diameter, Figs. 17 and 18, and an entirely separate line of pipes to the auxiliary pumping engines is provided. A large separator is arranged on the main steam pipes in the engine-house at the lowest level, with steam-trap, drain-valve, and gauge-glasses, and a similar separator on the auxiliary steam pipes of proportionately smaller size.

The main exhaust pipes are 16 inches in diameter, and connections are so arranged as to lead the exhaust direct to the top of the chimney, whither the pipes are carried, or to pass it through a large

Berryman feed-heater. By this arrangement a considerable saving in heat is effected, while the draught in the chimney is much increased.

The feed-heater is 20 feet high by 4 feet diameter, constructed of steel plates, and has a heating surface of 480 square feet, contained in solid drawn brass tubes of 2½ inches outside diameter. The area through the tubes is 167 square inches, while the area of the steam branch is 154 square inches. The feed-heater is said to be capable of heating about 3000 gallons of feed-water per hour from 50° to about 200° Fah., at the working pressure of 110 lbs. per square inch, when at full power, but this has not yet been tried.

Tank.—A tank capable of holding about 1500 gallons is erected in the engine-house, to act as a cistern from which the feed-water to the boilers is drawn. It is kept filled from the Glasgow Corporation water main in Govan Road by means of a ball stop-valve, 4 inches in diameter.

Feed-Pumps.—For feeding the boilers, two Cameron pumps of the double-cylinder double-ram type are placed below the tank. The cylinders are 8½ inches in diameter by 6 inches stroke, the rams being 6 inches in diameter. The pumps draw from the tank, and discharge into the feed-heater, and thence to the boilers. A bye-pass valve is provided to enable the pumps to discharge into the boilers direct, should this ever be found necessary.

Accessories.—Among the accessories, an automatic gauge is fitted up in the engine-house, showing the height of water in the dock at any stage of pumping, on a scale half-size. It is worked by a float in a cast iron pipe led to the bottom of the sump, and communicating with the indicator by means of a copper cord, led over reducing pulleys, to which a pointer is suspended.

An overhead travelling crane capable of lifting 7 tons is fitted in the engine-house to facilitate repairs.

Platforms, ladders, and hand-rails are provided, giving access to all parts of the engines and boilers, and the whole installation is very complete in this respect.

Performance of Machinery.

As already indicated, the test required of the machinery was that

with a tide of 26 feet 6 inches, commencing to pump at the top of high water, it should be capable of emptying the dock in two hours, the quantity of water to be removed in that time being 2¼ millions cubic feet. On the official trial, with a tide 26 feet 3 inches in the outside and 26 feet 1½ inches in the inside division, the dock was emptied in 99 minutes, the contractors thus having 21 minutes to spare, which was good work, considering that this was only the second occasion on which they had had an opportunity of trying the machinery under test conditions. Since then, this record has been beaten; for, with a tide of 27 feet inside and outside, the time has been reduced to 90 minutes for pumping out both divisions without a ship in either. This meant the removal of about 64,033 tons of water, the amount in the outer division being about 34,520 tons. If, then, a vessel displacing, say, 10,000 tons were docked in the *outer division only*, the quantity of water to be pumped out would be 24,520 tons.

It has been seen that the machinery is capable of removing 64,033 tons in 90 minutes, or roughly, on an average, 714 tons per minute, so that with a 27-feet tide the outer division of the dock, which is the larger, could be emptied in somewhat less than 35 minutes. This would probably be found much quicker than necessary, especially if a vessel of such a size had to be washed down during the process of pumping, even if it could be adequately shored up in such a short time.

As has been said, graving-dock machinery does not present much opportunity for economy in fuel, the time during which the pumps are actually at work being so short. Therefore, while not adopting the most economical type of engines, and thus avoiding cumbersome and somewhat complicated machinery, all other means of saving waste of heat have been adopted, such as expansion-valves, feed-heaters, and covering the boilers, cylinders, and pipes with the very best non-conducting composition. In machinery of this kind, simplicity, durability, and absolute certainty against breakdown, are the main considerations; hence the adoption of simple high-pressure non-condensing engines.

While the working of the pumping machinery was exceedingly satisfactory, it was desirable to ascertain the efficiency of the pumps

and engines, and from the results obtained on the official trial I have endeavoured to illustrate graphically by diagrams, Figs. 24 and 25, the work being done by the machinery at any minute during 99 minutes taken to pump out the dock.

This was the second time on which the machinery was tried in pumping the whole dock, and, owing to the firemen not having had time to get accustomed to the firing of the boilers under suction draught, the pressure of steam was not quite uniform. This affected, more or less, the power developed at the different intervals into which the whole time is divided, but the curves shown represent a fair mean of the results obtained, and may be relied on as sufficiently accurate for all practical purposes.

Explanation of diagram.—The vertical or water-gauge line to the left of the diagram is divided off into feet and inches corresponding to the gauge in the dock and tide gauge outside.

The curve A shows the quantity of water in the dock at any given depth on the gauge, and has been drawn from calculations of the capacity of the dock at every two feet.

At a height of 26 feet 1½ inches on the gauge, the quantity shown by measuring on the horizontal scale from the vertical or gauge-line to curve A is 2,165,620 cubic feet, and this represents the amount of water discharged in 99 minutes on the official trial. For the purposes of this diagram the total time has been taken as 100 minutes. On the trial, observations were taken at the end of every 10 minutes, and the height of water inside and outside recorded. The heights inside the dock were spotted along the curve A, and from points midway between these spots 10 vertical lines were drawn from the base, numbered 1 to 10, and on these lines were plotted to varying scales the results obtained on the trial, as well as those from calculation, giving data for drawing the other curves on the diagram, and representing the mean results for each of the 10 intervals. By further sub-division the results at any particular minute can be obtained. From the heights taken outside the dock the fall of tide at the end of each interval was obtained, and through the points thus fixed the curve D was drawn.

The quantity discharged during any 10 minutes interval is found from curve A, by subtracting the quantity at the end from the quantity at the beginning of that particular interval.

The quantity discharged by both pumps in cubic feet per minute is thus calculated, and is represented by the curve B.

The curve C represents the velocity of discharge in feet per second, and is calculated from B.

The curve D shows the depth of water outside the dock and the fall of tide during the time taken to pump the dock, and any vertical distance between curves A and D shows the actual head of water being pumped against at the corresponding time.

Curve E is drawn to show the additional head due to friction measured from the curve D. The vertical heights between A and E were used to measure the water horse power. The head due to friction has been calculated for each interval from the formula given by Professor Robinson in his excellent work on Hydraulic Power and Hydraulic Machinery; viz.—

$$Q = \frac{D^{2\cdot63}}{\cdot0209\sqrt{S}}\left(1 + \frac{T-50}{600}\right) \quad \text{where}$$

Q = quantity of water discharged in cubic feet per second,

D = diameter of pipe in feet = S,

S = hydraulic gradient = $\frac{l}{h}$,

l = length of pipe in feet = 100,

h = head due to friction.

The curve G shows the mean indicated horse power taken during each interval.

The curve H shows the water horse power developed, or work done by the pumps, and is obtained from the formula—

$$\text{W.H.P.} = \frac{H \times Q \times 60 \times 62\cdot5}{33{,}000}$$

H being the total head in feet shown by the vertical distances between A and E at the various intervals, and Q being the quantity discharged in cubic feet per second at the corresponding time.

The curve J shows the efficiency of pumps and engines combined,

and is obtained by dividing the water horse-power by the indicated horse-power of the engines. From this it is seen that the greatest combined efficiency is ·538, and at this point the I.H.P. was 1220; W.H.P., 657; mean revolutions per minute, 97; head of water pumped against, plus that due to loss by friction, 19 feet 1 inch. The approximate mean pressure on cylinders was 42·2 lbs. per square inch. The quantity of water then being discharged, 18,185 cubic feet per minute, and the mean velocity, 7·72 feet per second.

It is interesting to observe how rapidly the efficiency diminishes under light loads, and it would seem from the water horse-power curve, H, that the pump is most effective under a head of about 20 feet, with an efficiency of ·538, while with a 5 feet head the efficiency is only ·3. With the greater head of water probably the air is better got rid of, and there is less tendency for eddies to form.

Taking the combined efficiency of pumps and engines at ·538, and assuming the pumps would work out at about ·65, the efficiency of the engines would be ·83, which may be considered fairly good for a start, and before sufficient time had elapsed for the usual initial difficulties to be got rid of.

The curves, K and L, on the diagram show the approximate mean pressure on the pistons and revolutions per minute.

Since the official trial the bearings and valves have been adjusted, and the engines work better and apparently with less friction, so that the probability is that the efficiency will now be more like 90 per cent., which is what should be looked for in this kind of engine.

On the 28th February, 1899, another opportunity occurred of making a trial of the engines—on this occasion, under natural draught with four boilers—after the valves had been adjusted. The results of the performance of the machinery are given in a second similar diagram and corresponding table, from which it will be seen that with a 27-feet tide the dock was emptied in 90 minutes, that is, the whole dock without a vessel being in.

On reference to the diagram giving particulars of this trial the combined efficiency runs as high as ·583. If the pumps are ·65 as before, the efficiency of the engines would be almost exactly 9. The

amount of coal burned while the engines were working amounted to 79·5 cwt., which is equal to 5936 lbs. per hour. The mean horse power being 1221, the consumption works out to 4·86 lbs. per I.H.P. per hour, and assuming an evaporation of 8 lbs. per lb. of coal, the total amount of steam used would be 47,480 lbs. per hour, slightly more than the estimated quantity given in the tables.

Tables.—For convenient reference tables have been prepared of the various particulars from which the diagrams have been constructed, and which correspond with them. Two columns have been added, giving respectively the estimated quantity of steam used per I.H.P. per hour, and the estimated total quantity used per hour for the engines, which appears to be on the liberal side if anything (See next page).

In conclusion it is a matter of gratification to the Clyde Trustees, and all concerned with its working, that the performance of this machinery has so much exceeded the test requirements, and reflects credit on all the contractors.

Table showing performance of Puming Machinery at No. 3 Graving Dock during Trial 18th April, 1898. Draught 26 feet $1\frac{1}{2}$ inches inside, 26 feet 3 inches outside. Dock emptied in 99 minutes.

	B	C	D	E	F	G	H	J	K	L	M	N
No. of interval of 10 minutes.	Q Average quantity of water discharged per minute through two 60″ pipes during each interval. Cubic feet.	V Mean velocity of discharge through two 60″ pipes during each interval. Feet per second.	h Mean head of water in dock, allowing for fall of tide during each interval. Feet.	h^1 Mean head due to friction in pipes during each interval. Feet.	H Total mean head pumped against during each interval $= h + h_1$ Feet.	I.H.P. Mean I.H.P. during each interval measured from diagram.	W.H.P $= \frac{H \times Q \times 62{\cdot}5}{33{,}000}$	Efficiency of pumps and engines $= \frac{\text{W.H.P.}}{\text{I.H.P.}}$	Mean pressure in cylinders during each interval. Lbs. per sq. in.	Mean revolutions of engines per minute during each interval.	Pounds of steam used per I.H.P. per hour. Estimated.	Pounds of steam used per hour for engines. Estimated. M.×I.H.P.
1	27970	11·87	1·4375	·5	1·9375	775	103	·132	37·6	69	38·6	29915
2	26570	11·28	4·1737	·4513	4·625	850	233	·274	38·7	73·5	38.4	32640
3	25135	10·67	6·9638	·4037	7·3675	925	354	·379	39·57	78·3	38·2	35335
4	23940	10·16	9·5556	·3661	9·9217	996	450	·451	40·33	82·7	37·8	37649
5	22350	9·485	12·0526	·3182	12·3708	1060	524	·49	41·04	86·5	37·6	39856
6	20910	8·875	14·4545	·2785	14·733	1120	583	·521	41·45	90·5	37·2	41664
7	19490	8·272	16·732	·243	16·975	1175	626	·533	41·87	94	36·8	43240
8	18185	7·718	18·879	·212	19·091	1222	657	·538	42·2	97	36·4	44481
9	16692	7·042	21·259	·177	21·436	1272	678	·532	42·6	100	36·0	45792
10	15320 *	6·502	23·26	·15	23·41	1320	679	·515	42·84	103·2	35·6	46992

* The sum of above quantities, multiplied by 10, gives the total capacity of dock at 26 feet $1\frac{1}{2}$ inches, equalling 2,165,620 cubic feet.

The letters at head of each column correspond with the letters on curves of diagram. This trial took place with three boilers under induced draught—a fourth boiler being used about the beginning of 9th interval; on account of the firing being irregular the steam got low towards the end of the trial.

Table Showing Performance of Pumping Machinery at No. 3 Graving Dock during Trial 28th February, 1899. Draught inside 27 feet, outside 27 feet. Dock emptied in 90 minutes.

A	B	C	D	E	F	G	H	J	K	L	M	N
No. of interval of 10 minutes.	Q Average quantity of water discharged per minute through two 60″ pipes during each interval. Cubic feet.	V Mean velocity of discharge through two 60″ pipes during each interval. Feet per second.	h Mean head of water in dock, allowing for fall of tide during each interval. Feet.	h^1 Mean head due to friction in pipes. Feet.	H Total mean head pumped against during each interval $=h+h^1$ Feet.	I.H.P. Mean I.H.P. during each interval measured from diagram.	W.H.P $=\frac{H \times Q \times 62{\cdot}5}{33{,}000}$	Efficiency of pumps and engines $=\frac{\text{W.H.P.}}{\text{I.H.P.}}$	Mean pressure in cylinders during each interval. Lbs. per sq. inch.	Mean revolution of engines per minute at each interval.	Pounds of steam used per I.H.P. per hour. Estimated.	Pounds of steam used per hour for engines. Estimated M.× I.H.P.
1	35312	14·985	1·75	·797	2·547	901	170	·189	37·75	80·5	38·4	34598
2	34100	14·475	5·208	·743	5·951	1062	384	·362	42·35	84·0	37·6	39931
3	30750	13·05	8·583	·604	9·189	1176	535	·455	44·95	87·6	36·8	43276
4	26010	11·04	11·583	·432	12·015	1245	592	·475	46·7	90·7	36·2	45069
5	22760	9·656	14·208	·332	14·540	1285	626	·487	46·27	93·2	36·0	46260
6	20825	8·838	16·625	·277	16·902	1308	666	·510	45·9	95·5	35·8	46826
7	19385	8·225	18·833	·24	19·073	1325	700	·534	45·4	97·8	35·6	47170
8	18235	7·74	21·166	·212	21·378	1330	739	·555	44·65	99·8	35·6	47348
9	17310	7·347	23·5	·19	23·69	1331	777	·583	43.72	102·0	35·6	47383

This trial took place without induced draught, but with four boilers working.

Discussion.

The discussion on this paper took place on 25th April, 1899.

Mr A. S. BIGGART (Member) observed that American white oak had been used instead of the usual greenheart for the heel and meeting posts of the gates. Would Mr Baxter kindly tell the Institution why that had been done?

Mr C. C. LINDSAY (Member) remarked that he was pleased to welcome something in the form of a civil engineering paper, for civil engineering papers had almost reached the vanishing point in the Institution. He admired the paper for its completeness, and thought Mr Baxter had been very modest in not stating the important part he took in the general arrangement of the machinery which appeared to be thoroughly well adapted to its work, and he must have given a great deal of thought to it. He would like to have seen some idea of the cost of the machinery. They could hardly expect to have the cost of the dock mentioned, as that perhaps fell without the scope of Mr Baxter's paper. The description of the gates interested him very much, but he thought it would have been an improvement to have had perforated plates instead of braced diaphragms in the air chambers to secure greater stiffness, for the slightest "give" in the gates caused leakage and trouble. Mr Biggart touched upon a point which interested him. He had been in the habit of using greenheart for heel posts and mitre posts; perhaps there was some particular reason for white oak. He very much admired the diagrams that Mr Baxter had given, and it would reward any man, whether he was a young engineer or an experienced one, to study the particulars of these diagrams. It was quite a lesson in pumping machinery. One could not possibly investigate the curves of performance without learning a very great deal from them.

Mr T. A. HAYWARD (Member) said he would like to make some remarks respecting the caisson which Mr Baxter had brought before their notice Although the Clyde Trustees' No. 3 graving dock was larger than any other in the world, the caisson evidently was not

larger. In Her Majesty's dockyard at Chatham there were four caissons, each being 40 feet in depth; two being 90 feet and two 100 feet in length. The caisson mentioned in the paper was 90 feet in length and 30½ feet in depth. In comparing the latter with those existing at Chatham, it appeared to him that an advance had not been made on what was his experience 18 years ago. He noticed that it was divided into two chambers, the bottom one being an air chamber, and the top being open for admission of the tidal water through valves at the sides. In the Chatham caissons there was simply one chamber—the air chamber below—and no matter what the height of the tide was, it did not materially affect the buoyancy of the caisson; for the air chamber was always submerged, and when the tide rose the only difference that had to be made was made up in two small tanks, one at either end, with only a few tons of water taken from a service main. A caisson constructed in this way had less water to displace in passing in and out of its chamber, and in consequence of its being open from end to end above the air chamber, he thought there would be a steadier motion at high water than when the volume of water, due to the whole capacity of the caisson below the water-line, had to be displaced through the apertures at the sides and bottom. The Chatham caissons were not upon rollers, but simply upon granite slide-ways, and he thought there was an advantage in that, because the keel plates were guided by the granite slide-ways right from end to end, instead of the projecting pieces, which, Mr Baxter stated, had been put on to preserve the wood from being abraded. If abrasion of the wood did not take place, he thought the stone work would be ground away, and that would be equally defective in making a water-tight joint. He did not notice in the paper any mention of guides other than the flanged rollers and those he spoke of; but, at at Chatham there were guides at the top and bottom of each caisson, which kept it central in the chamber and slide-ways till it came within a few feet of the wall; there was also a projecting beam which passed into rollers and prevented the caisson striking against the projecting wall at the further side of the dock, and by this means it

Mr T. A. Hayward.
was impossible for it to be pressed against the wood work, and therefore abrade it. In this case, however, he thought there was a possibility of that happening, due to oscillations, which might occur to the caisson in its progress outwards. He had seen that occur, and it was found to be due to the unevenness of the bottom, caused by the foundation having given way. The top of the caisson might also be affected by the swell on the water, and, naturally, being pushed from the back, it would have freedom to oscillate very materially in the front. If it did so, as possibly it would at some time or other, in consequence of the action of the propeller—while a steamer was going out of the dock for instance—when the caisson had to be immediately closed, he had no doubt that that effect would be produced, and it would likely abrade the wood work, which could not possibly take place at Chatham. At Chatham each caisson was made up from the bottom to the top entirely of its own material, without any rising or falling bridge, and that avoided the necessity of adopting these cumbrous levers. Instead of such there was a platform under which it passed, and which was hinged at one end and raised by hydraulic power at the other, and the only moveable parts on the caissons were the hand rails. It seemed to him that the caissons at Chatham would remain as they were, when the Glasgow caissons would be requiring considerable repair. There were other points in the paper respecting the efficiency of the pumping engines that had struck him as being rather peculiar. On page 291, the mean pressure in the cylinders during each interval was given. In No. 1 interval it was 37·75 lbs. per square inch, and in the last interval it was given as 43·72, while in the case of No. 4 it was 64·7, and the mean revolutions of the engines per minute at each respective interval was 80·5, 102, and in the latter case only 90·7. He could not understand these figures; the average quantity of water discharged per minute was less, of course, against the greater head, but he could not understand why it should show a mean reduction in the pressure, which was 9·35 per cent. in regard to No. 9 interval as against No. 4; there was 11·24 per cent. increased speed, while there was 9·35 per cent. of a decrease of mean pressure.

Mr T. A. Hayward.

This discrepancy did not appear in the Table shown on page 290, and he was inclined to think that was the more correct.

Mr D. H. MORTON (Visitor) said that by the courtesy of the Secretary he had received a copy of Mr Baxter's paper, which he had read with great interest. Mr Baxter had stated that the construction of a large graving dock was not of frequent occurrence, that was true, and Mr Baxter's admirable description of the present important installation was therefore all the more valuable. Several important installations of a similar character had been built during the past fifteen years, both at home and abroad; not one of these had been adequately described, partly because no one had taken the trouble to do what Mr Baxter had done, and partly because of the old-fashioned and rather absurd trade jealousy, which prevented some machinery contractors from giving adequate drawings and descriptions of their part of the work. He (Mr Morton) had, with others, the privilege of going over the dock, shortly before it was completed, under the guidance of Mr Hamilton, and he was much gratified by the evidence of thoughtful design, liberal treatment, and first-rate workmanship, which were characteristic of the works throughout. He thought the thanks of the Institution were due to Mr Baxter for putting on record, in such a painstaking manner, an account of the dock machinery and its working. The last speaker had dealt with the caissons, and had indicated a preference for the older fashioned caissons in use at Chatham. He (Mr Morton) had no doubt, however, that the rolling caisson and folding bridge would work quite as satisfactorily, as others of similar design had worked on the Clyde and elsewhere for many years. There was only one little matter which he had noticed in looking at the caisson, before the coffer-dam had been removed, that was that the rollers were sunk very deeply in their cast-iron cradles. This, doubtless, made for stability and economised depth, but it struck him that the rollers might from their position be rather liable to be silted up. He did not suppose that they would be silted up so that they could not be moved, only that, being so low set, the wear and tear might be greater than if the bearings were in free water, like the rollers

Mr D. H. Morton.
supporting the inner gates, for example. Turning to the pumping machinery, he was glad to observe that Mr Baxter had adopted a reasonably large diameter for the discs or impellers of the large pumps; namely, 8 feet. For brevity's sake, they might call the diameter of the eyes or side inlets of the pump *d*, and the diameter of the impeller D. It would be found that when D was much less than twice *d*, the efficiency of the pump would be low; again, on the other hand, when D was very greatly in excess of twice *d*, the efficiency would also be low. Some thirty years ago, a well-known firm of hydraulic engineers undertook a contract for machinery to raise 2000 tons of water per minute through a height of 7 feet 3 inches. For that purpose they provided eight centrifugal pumps with delivery pipes 54 inches in diameter, only 6 inches less than the pumps at No. 3 Dock. The ratio of D to *d* was, however, made quite too small, and the pumps failed to accomplish their work until from 6 inches to 9 inches had been bolted to the extremities of the vanes. The impeller was thus increased by about 12 or 18 inches in diameter—he spoke from memory—and later experience showed that it should have been still larger to secure the best results. He did not think that the mistake of under-estimating the diameter required for the impellers was very discreditable to the contractors, as at that time very little data were available for the construction of large pumps. He thought on the contrary that they were to be commended for their courage in undertaking a contract to deal with such a large volume of water under the circumstances. In the present case, the diameter D, 8 feet, in relation to *d*, 3 feet 8 inches, might be considered satisfactory, and in large pumps there was no temptation to make D larger than necessary to secure efficiency, as the size of the pump-casing would have to be increased and therefore also the cost. With small pumps the case was different. In the drainage pump, for example, the delivery pipe was 15 inches in diameter, while the impeller was 4 feet 4 inches in diameter, *d* in this case was probably 11 inches or thereabout, so that D was nearly five times *d*. With such an excessive ratio, high efficiency would not be expected, and probably the only reason for those proportions was

Mr D. H. Morton.

that the revolutions of the driving engine might be kept down to 230 per minute. At the present day, however, there was no necessity for keeping down the revolutions. Had the diameter of the impeller been reduced to 3 feet or 2 feet 6 inches, and coupled to a good compound high-speed engine, say of the Belliss type, they would have had a more efficient machine, as there was absolutely no difficulty in running all day and all the year round at from 300 to 450 revolutions per minute. Speaking from a rather extended experience with quick-revolution engines, he had to say that the perfect running, freedom from trouble, and low cost of maintaining the modern enclosed engine was something of a revelation, and now he would have no hesitation in choosing an engine of that type for small and medium powers, and for ordinary driving purposes, instead of the ordinary vertical or horizontal engine making 70, 80, or 100 revolutions per minute; because, he was sure that the results would be satisfactory, both with respect to running and cost of maintenance. Working parts balanced and entirely enclosed, piston-valves, and forced lubrication to all bearings, were essential features of those engines. The piston valves should, of course, be examined after a year or two of running to check possible waste from leakage of steam. Reverting to the main-pumps and looking at the section, in the side entrances or eyes, which he had called *d*, carrier bearings to assist in supporting the impeller and its spindle were to be found: he did not know if it was necessary to have these bearings, but it was certain that if they could be dispensed with they were better away, as they obstructed and disturbed the water at a critical point. He had not found it necessary to use such bearings; a little skill displayed in extending the stuffing-box bearings in towards the pump, and in properly extending and shaping the impeller boss outward to spread the load and help to stiffen the spindle, did all that was needed. It should be remembered that after all the load to be carried was not great, the impeller was revolving in water, and with a properly-formed pump-casing there was little or no thrust in the plane at right angles to the axis of the pump. He had seen a pump, after fifteen years' work, with its stuffing-

Mr D. H. Morton.
boxes in such a condition that one would have imagined that they had recently been renewed. That was in Holland, where machinery was carefully tended, and the general report of the Dutch engineers was that these bearings did not wear much in reasonably clean water. The form of the impeller and its vanes had considerable influence on the efficiency of the pump, but these were not shown in the section. The angle of entry at the heel of the vane, the mean angle, and the angle of delivery at the tip should all be adjusted in each case in relation to lift, speed, and form of casing. The form of the casing had also its influence. In the most efficient centrifugal pumps the casing was always found to be large in relation to the diameter of the impeller D. Fifty years ago the late Prof. James Thomson showed how to design the chamber for a centrifugal pump and for a turbine, and he frequently found in perusing old books that we had long ago been taught to do properly many things which to-day we still did improperly. Prof. Thomson provided an annular space outside the periphery of the impeller, this he called the "whirlpool chamber," and outside of this space he arranged the expanding casting. The object of such arrangements was to recover as much of the energy remaining in the water on its delivery from the tips of the vanes of the impeller as was possible. To carry out this arrangement in its entirety involved a very large casing compared with D, but a compromise would produce satisfactory results. In the section of the pump for No. 3 Dock, it would be observed that the centre-line of the outlet-branch of the pump was practically tangential to the periphery of the impeller, and that the "stop," as it was called, which coincided with the inner side of the discharge-branch, was tangential to the eye or side-opening in the pump *d*. Such a casing fell far short of Professor Thomson's ideal; and in the quarter section of the periphery of the impeller, near the discharge-branch, there would be a disturbance of the uniform delivery, which was detrimental. To secure the best results, the inner or stop side of the discharge-branch should be *beyond* the periphery of the impeller. That arrangement gave a much larger casing, but it also gave

facilities for further improving the flow of water towards the discharge-branch. From the section, it would be observed that a portion of the water delivered from the periphery of the impeller, instead of falling quietly into stream with the water flowing towards the delivery, must disturb some of that water, forcing it back over the sides or shrouding the impeller. The pump casing was really made as in the section for commercial reasons, because it enabled a pump of given capacity to have a smaller and cheaper casing. A more perfect casing would have been 5 or 6 feet larger in diameter over all, and the cost would, of course, have been somewhat greater. Mr Baxter had pointed out that, in graving dock work, reliability of machinery was really of more importance than the highest efficiency; and that was quite true, when the machinery had only to run for a period of two hours once or twice a week. He merely called attention to these matters in order that the centrifugal pump might not have a worse reputation than it deserved, and because when such a pump was applied to land drainage, irrigation, or other work involving long spells of running, efficiency became a matter of first importance. By applying all available skill and experience, very satisfactory efficiencies could be obtained. Mr Baxter seemed to attach great importance to the discharge-chamber and to the back-flap or reflux valves on the extremity of the discharge-pipes, Fig. 11. Many important installations had no such additions, and their introduction prevented the use of certain other arrangements which might improve the efficiency of pumping in other respects. The advantage of back-flap valves in facilitating starting and restarting the pumps, when sluice valves were provided in addition, was not very obvious. It was the head rather than the volume of water which had to be overcome, and with skilful manipulation of the engine and of the sluice valves there were no difficulties. In making provisions for security of life and property, engineers were guilty of many anomalies. In many situations which might really be termed dangerous, engineers left everything to the skill of the attendant or to the prudence of the public. In other cases they would spend hundreds of pounds in providing against contingencies which would

Mr D. H. Morton.
not occur if ordinary care and prudence were displayed. In pouring from the jug of contingencies, he thought that perhaps Mr Baxter had filled the cup quite to the brim. He had told them that the water might rush back and up through the discharge-chamber with a velocity of 40 to 50 feet per second, and probably blow up the floor-plates. The theoretical velocity due to direct fall could hardly reach 40 feet, and would be subject to sundry deductions. But it was difficult to see how the head to produce this velocity could be established in ordinary work. During pumping the head in the discharge-chamber would always be equal to that in the river, plus the head necessary to drive the water through the discharge culvert. The sluice valve would, as a matter of course, be gradually closed before the engine was allowed to stop, so that back-rush would not be allowed. As was well known, large valves should never be closed suddenly, and arrangements ought to be made so that they could not be so closed. If there were cases where the water could rush back at the rate of 40 to 50 feet per second into a chamber covered with close floor-plates, it was quite desirable that these plates should be blown over the roof; they should never have been put down—the covering ought to have been an open grating. But if there were no chamber, there would be no floor-plates to be blown up; the worst that could happen would be a back-flow through the pumps, and, in such a case, Mr Baxter had said that the engines might be reversed with great rapidity, causing damage. He (Mr Morton) had seen a pump driving the engine backwards in such a case, but never at any great speed. It must be remembered that the pump was designed to throw the water out, not to take it in, and if it were as well designed for going ahead, as it ought to be, it would only make a poor performance in going astern. He had had the impeller of a pump reversed in its casing for the sake of instruction, and the result was that, although the engine was driven for all it was worth, the pump could not be made to discharge more than half-bore; that pointed to the fact that, even although the water did run back through the pump, the result would not be serious. The vanes of the impeller were not formed in the best manner to

enable it to act as a turbine in driving the engine. By the introduction of the discharge-chamber between the pumps and the delivery culvert, they lost the opportunity of utilising the energy which remained in the water at the moment of issuing from the 60-inch pipes. That energy was of considerable value. If the water issued from the 60-inch pipe, at from 12 to 15 feet per second, and if proper care were taken to continue the flow at a gradually reduced rate, then the effect on the efficiency of pumping would be marked, and the figures in the tables would be improved. By introducing the discharge-chamber the water issuing from the pump had its high velocity suddenly reduced, eddies and disturbances were set up, and more head had to be generated by the pumps to again accelerate the water and drive it through the discharge-culvert. With regard to the feed-water heater, he observed that the areas of its branches and through the tubes were distinctly less than that of the main exhaust-pipe, he preferred to make the passages through the heater fully as large as the main exhaust; and when that was done, the whole of the exhaust steam could always pass through the heater, the back-pressure would be practically nothing, and would not be traceable on the indicator-cards, provided always that the heater was properly designed. Turning to the performance of the machinery, the discharge from each pump was 367 tons per minute. That was a good discharge for a 60-inch pump, but not more than many pumps with 54-inch pipes were delivering under like conditions. It was customory to designate the size of a pump by the size of its orifice; but that was by no means a criterion, unless the pumps were designed on similar lines. There were pumps with large orifices which were of less capacity, and were really smaller than others with small orifices. The efficiencies of pumping engines, that is of the combined machine, engine and pump, were found to range from about ·3, when the lift was 5 feet, to ·583, with a lift of 20 feet, and the maximum efficiency was ·583, when the lift reached about 24 feet. These results were probably about as good as were obtained in nine graving docks out of ten, and the engineers had no reason to be ashamed

Mr D. H. Morton.
of them. Still better might be realised by attention to little matters of detail here and there, for it was the aggregate of little differences which resulted in high or low efficiency. The centrifugal pump made a most interesting study, and in dealing with its design, engineers had to proceed much on the same lines as those which guided them in designing turbines and screw-propellers, and in seeking to obtain good results from ships. In graving dock work, the low efficiency when the lift was small, was partly due to driving what might be termed an excessive quantity of water through the dock, while the lift was only a few feet. Commercially, it paid to do this in graving dock work; but, it was possible in drainage work, by putting into the design everything that one knew or could learn, and, by adopting a more moderate rate of discharge, to obtain with a 5-feet lift the efficiencies which had been obtained here from a 20-feet lift. Under favourable conditions the efficiency might be ·55 to ·57 with a 5-feet lift. These results had been obtained during several tests, made by French and Dutch engineers, on installations which he had had pleasure in designing. To raise many tons of water per minute through a height of only 5 feet, imparting to the load a velocity of say 600 feet per minute, and to deposit it again in still water, with a loss of only 45 per cent. of the power shown by the indicator, might be considered a good result. As the lift increased the efficiency steadily improved, so that when the lift reached from 15 to 20 feet the efficiency might be ·65, which might be considered the best yet obtained. Separating the efficiences, the efficiency of the pump under the most favourable conditions was probably from ·70 to ·75, which, taking the engine at ·90, corresponded with the figure given for the combined machine. But such results could hardly be expected in graving dock work, nor would they be expected with very small pumps. With regard to the table of steam consumption, he thought the results for 38 to 36 lbs. of steam per I.H.P. were slightly disappointing, because with first-class, high-pressure, non-condensing engines, with steam-jackets and cut-off gear, a steam consumption of from 28 to 26 lbs. of steam per I.H.P. per hour ought to be obtained. Such results would

be guaranteed by experienced builders of this class of engine, and, if necessary, they could be shown. Mr Baxter had only given his figures as estimated, and they would, of course, be subject to small deductions owing to steam-pipe losses, donkey pumps, &c. Still the difference was too great, and that seemed to be borne out by the actual coal consumption of 4·86 lbs. per I.H.P. per hour. With similar engines having cylinders of 22½ inches diameter and 24 inches stroke, the Mersey Dock authorities had obtained on trial a consumption of 3 lbs. per I.H.P. per hour. The Lancashire coal would probably be better than the Scotch coal, but certainly not in proportion to these figures. Mr Baxter had called attention to the desirability of securing uniform velocity throughout the revolution of the impeller. He (Mr Morton) had not found much difficulty in regard to that. With a properly designed pump-casing, the uniform flow of water helped to correct the irregularities of the engine, and very satisfactory running had been obtained with single-crank tandem compound engines coupled to large pumps. It was, of course, right to balance the moving parts belonging to each cylinder; in addition to this, the tendency during the past ten years had been to place the cranks at opposite rather than at right angles, as had been done here. Seeing that Mr Baxter had adopted two cranks, that the steam pressure was 110 lbs. per square inch, and that the load on the engine could always be well maintained, he thought that one of the twin cylinders might with advantage have been exchanged for a larger one, making the engine compound non-condensing. That could hardly be called a complication, the extra cost need have been nothing, and the steam consumption under the conditions would probably have been distinctly lower than given in the tables. It would be noticed from the two tables, that considerably better results had been obtained in the second trial, and Mr Baxter rightly enough attributed that to the better condition of the engines during that trial. There might have been other contributory causes. It would be observed that on the second trial the quantity of water passed through the pumps was at all times greater than on the first trial. The discharging efficiency of large pipes was better than for

Mr D. H. Morton.
small, and that, with a constant resistance and length of pipe, the discharging capacity increased as the 2·5 power of the diameter, so that with very large pumps they could adopt considerably higher velocities than would be right for those with smaller passages. He thought the lowest speeds used—about 7 feet per second—might be too low for such large pumps, and that possibly still better results might be obtained if it were worth while to drive them faster than on the second trial. He observed that Mr Baxter in estimating efficiencies took credit for the head caused by the friction of the discharge-pipes. While it was usual and correct to estimate the pipe friction for water-works engines, where the pipes were long and the friction might be greater than the actual vertical head, it had not in his experience been the custom to make such allowances in centrifugal or turbine installations. He thought that in such cases the whole installation should be dealt with as one machine, that the head should be measured simply by registering the differences between inside and outside waters throughout the trials, unless indeed some part of the approaches or discharge culverts had been made undeniably too small from causes beyond the control of the mechanical engineer. The skill of the engineer should be displayed not only in the pumps, but in the approaches and discharges, so that all minor causes of waste might be reduced or eliminated.

Mr Baxter, in reply, thought it would be almost impossible, without some consideration, to give satisfactory answers to the very interesting criticisms they had just heard. There were, therefore, only one or two points he would like to reply to that evening, and he would probably deal with the remainder by correspondence. American white oak was adopted because of the great difficulty experienced in obtaining greenheart sufficiently sound and free from shakes to be used in such lengths as were required for the caisson and division gates. They had had already experience of American white oak in the case of No. 2 graving dock, and they found it so very satisfactory that it was adopted in this case, although greenheart was originally specified.

Mr BIGGART—May I ask how long it has been in use in No. 2 graving dock?

Mr BAXTER—It has been in use since October, 1886. With regard to the question of contractors, he thought it was becoming unusual to mention the names of the contractors for the work, and on that account they were left out in this instance. Otherwise he would have been very pleased to have mentioned them. In reply to Mr Lindsay, he could not give the exact cost of the whole installation, but the contract price for the engines and pumps was about £6,000, and the boilers about £6,600; about £12,600 for the engines, boilers, and pumps. The diaphragms in the air chambers of the caisson were almost exactly similar to those in the caisson at No. 2 dock, and it had given such great satisfaction that they did not see where it could be altered to make any improvement on it. The necessary stiffness was secured by the 30-inch deep transverse floors, by the intermediate deck forming the top of the air chamber, the vertical frames and reverse bars, the wide stringers and numerous beams, and the diagonal bracing. It was practically a duplicate of that at No. 2 graving dock, except that it was a little larger, and there had been absolutely no trouble from leakage at the caissons of either of these docks.

The PRESIDENT said that this was a very important paper, and he had much pleasure in proposing a hearty vote of thanks to Mr Baxter for his valuable contribution to the Transactions of the Institution.

The vote of thanks was heartily accorded.

In further reply to the discussion Mr BAXTER wrote as follows:—The caisson was made up of two portions, the lower being used as an air chamber and the upper as a water-ballast compartment, the water being always admitted as the tide rose, and in that respect the caisson might be said to be similar to that at Chatham. But the object of the upper portion was to enable the caisson to be floated out of its berth when necessary, the ends of the caisson being bevelled to admit of this, by closing all the valves and thus allowing the water to rise all round until the displacement of the caisson was

Mr G. H. Baxter.
equivalent to its weight when afloat; it might be removed for repair of itself or any of the subsidiary fittings. This, however, might not happen once in forty or fifty years. No. 2 graving dock caisson, which had been there fourteen years, had not yet required to be removed. Again, if it ever happened that after the tide began to ebb a vessel on being docked took the blocks too soon, the water would then have to be kept in dock until the following high water. That would be done by shutting the water-ballast valves and allowing the caisson to bear on the *outer* face. It was very rarely, however, that this ever happened, and with the larger depth on sill at Chatham probably was a contingency that would be thought unnecessary to provide for there. The water at No. 3 graving dock was very muddy, much more so than at Chatham, and there was a heavy deposit of mud on the top of the air chamber. By filling the upper chamber at high water, then shutting the valves and opening those next the river side of the caisson at low water, much of this deposit was removed by the sluicing action that took place. By shutting them at low water any deposit might be removed in buckets, through apertures in the folding bridge. It was true that in the Chatham caisson there would be less water to displace in hauling it out and in than in the No. 3 graving dock caisson, but the rate of progress was slow, usually about 15 feet per minute, although 20 feet was the specified time. At the former speed and at high water, the water flowing past the sides and bottom of the caisson while being hauled into the chamber would acquire a velocity of only 1·3 feet per second, which was scarcely worth taking into account and would, on the other hand, tend to steady the caisson while being hauled out and in. The system of guiding the caisson adopted at Chatham would, he feared, be inadmissable on the Clyde where there was such a considerable deposit of silt, and the method of guiding on rollers had given every satisfaction. The Chatham caisson being so much deeper would probably require guides at the top and bottom, while these were not necessary in No. 3 dock caisson, which, owing to the great proportion of breadth to draught and being so well ballasted, had no tendency whatever to oscillate. No trouble had been

experienced on account of the abrading of the bearing surfaces, indeed a very slight rubbing on the surfaces might be a benefit rather than otherwise, as it would tend to keep them clean and tight. There was never any swell on the water at that part of the harbour sufficient to cause it to oscillate, and vessels being docked were not allowed to move their propellers so near the dock entrance; while no steamers would be passing the dock entrance at any speed to affect the caisson at the time it was being hauled out or in. Regarding the automatic folding bridges which Mr Hayward suggested were less convenient than the system of a hinged platform worked by hydraulic power, he had no doubt each design was best suited to the purposes required at either port, and as a level cart road across the dock was an absolute necessity at Glasgow it was difficult to see what better communication could be adopted than the folding bridge. There was so little wear on the lever joints that practically nothing had been done to those in No. 2 dock caisson since it was put in operation in 1886, and they were likely to last for the next 50 or 100 years without repairs of any consequence. The last point raised by Mr Hayward was a most interesting one. He did not claim strict accuracy for the revolutions, they were taken by watch and might vary slightly according to the accuracy of the person counting them; and it was possible also that the engines might not have been quite in the same condition on the two trials as regarded friction of bearings, pistons, valves, etc., and the lubrication might not have been the same. It should be noticed also that in the first trial a fourth boiler was used about the beginning of the ninth interval, which might have some effect on the dryness of the steam and show a higher pressure corresponding with the revolutions at the finish than at the middle of the time taken to pump the dock. But whatever the cause, the seeming anomaly remarked on by Mr Hayward—viz., that with reduced pressure a considerable increase in the number of revolutions per minute would take place at the greater heads—had been observed before, and might be accounted for by the fact that after the water reached the top of the opening to the main culvert in the side of the dock, which would

Mr G. H. Baxter.
be about 10 feet above the floor, a large volume of air was drawn in, thus reducing the density of the water, and as the water level in the dock was lowered to reach the openings of the other culverts the tendency of air to rush in along with the water towards the sump was much increased. That this was the case had been proved by shutting the sluice valve on the discharge of one of the pumps and opening the valve on discharge of the ejector when the air bottled up in the pump casing could be heard rushing out with considerable force. Referring to Mr Morton's observations, it had been often remarked that the discussion to which a paper gave rise was frequently more interesting than the paper itself, and this applied with exceptional force to the present case. Mr Morton's observations, which were based upon a long experience in the design and manufacture of the highest class of centrifugal pumping machinery, were, therefore, of more than ordinary value, and formed an important contribution to the discussion of this subject. His references to the pumping machinery, and especially to the pumps themselves, supplemented the inadequate description given in the paper, and entered into details which only an expert could sufficiently appreciate. He therefore forwarded his remarks to the makers of the centrifugal pumps, Messrs Gwynne & Co., with whom he had been in correspondence relative to the co-efficients of efficiency given in the tables, in order that they might have an opportunity of offering any remarks on the points raised by Mr Morton. He would endeavour to follow him as far as his limited knowledge of centrifugal pumps permitted, and before doing so would express his thanks for the kind and flattering remarks with which he had prefaced his observations. It would be convenient to reply to the various points in the order in which they had been raised, and the first mentioned was in regard to the possible silting up of the rollers. Although there was a tendency to silt up, it was found that much of the silt was carried in the water in suspension, and while some of it was deposited, the caisson itself being open for only comparatively short intervals prevented access of silt to the rollers, and the space below the caisson would hold the accumulations of years before it would require to be cleaned out, while cur-

Mr G. H. Baxter.

rents caused by the working out and in of the caisson tended to clean away any little accumulation of silt that might take place in the neighbourhood of the rollers. With reference to the installation referred to by Mr Morton, which, however, was constructed twenty years ago, he thought it would be admitted that the one at No. 3 graving dock compared very favourably with it. Assuming that the pumps in the former installation had performed the work for which they were designed—which, however, they did not accomplish—each of them would have delivered 9,000 cubic feet of water per minute through a lift of 7 feet 3 inches. On referring to the diagram of the second trial of the pumps at No. 3 graving dock, it would be seen that at a lift of 7 feet 3 inches each pump was discharging at the rate of 16,250 cubic feet per minute. Although the former had discharge pipes of 54 inches diameter, as against 60 inches in the latter, the difference was still overwhelmingly in favour of the pumps at No. 3 graving dock. The side inlets of the 15-inch auxiliary pump were each 13 inches (not 11 inches) diameter, and the diameter of the disc was therefore four times that of the inlet, a better proportion than that assumed by Mr Morton. With an open single engine of this size, cylinders 14 inches diameter by 10 inches stroke, some engineers might be of opinion that 230 revolutions per minute was fast enough considering the character of the work; and whatever advantage might be gained by the adoption of a quick-running enclosed engine would be balanced by the disadvantage of doubling the number of working parts to overhaul and keep in repair, and by practically doubling the chances of leakage from piston valves, etc. And when it was considered that this pump was required to work only occasionally and for a short time, the conditions being entirely different when it would have to be run continually for a prolonged period, no great economy was to be gained by having two-cylinder engines. Besides, the space at disposal was so contracted that it would have been inconvenient and almost impracticable to adopt engines of the double-crank type. With further reference to the main pumps, he quite agreed with Mr Morton that, where practicable, the inner or carrier bearings should be dispensed with; but, in view of the weight of the 8 feet disc and the

Mr G. H. Baxter.
long span between the stuffing-box bearings, which appeared to be long enough already to admit of proper lubrication, it was questionable if it would have been prudent to have dispensed with the carrier bearings; and to have extended the boss of the disc to either side, as suggested, would have either curtailed the area of the side aperture in the casings or entailed the suction pipes being made excessively large. Mr Morton's suggestion as to having pumps made with a "whirlpool chamber" was undoubtedly correct in theory, and pumps so fitted were usually more efficient and also more costly than those without them. But to have designed the No. 3 dock pumps with "whirlpool" chambers would have necessitated the casings being made 5 or 6 feet larger in diameter. This would have been quite impossible in the space at disposal, and if it had been possible, it was questionable if any advantage in the form of additional efficiency would have been gained commensurate with the disadvantage of the increased size of casings and the extra cost, keeping in view the fact that the pumps only worked for a very short time. It would be quite different in the case of pumps working continuously, for then the question of highest possible efficiency became the predominant problem in the design of the pump. In regard to the "stop" to which Mr Morton alluded, it would scarcely be possible to have it arranged otherwise in a casing of this design. To have made it as suggested would have involved a "whirlpool" chamber, which had already been shown to be impracticable in the space at disposal. Regarding the reflux valves, he had not calculated the velocity of back-flow, and admitted that at 40 or 50 feet per second it might be overstated, although, as a result of the arrested momentum of such a large body of water flowing at about 10 to 15 feet per second, the flow might be suddenly increased for a few seconds quite as much as 40 or 50 feet per second. The intention was more to give a general impression of the effect of the momentum of water flowing partially controlled through the various passages, especially where it came into contact with confined air; and even if the velocity were one-half or one-fourth of that stated, it was sufficiently great to occasion serious damage, if such an event as was sought to

provide against ever happened. As showing the force of water and air under pressure, it was worth remarking that in filling the docks it was observed that, after the culverts in the side walls were filled and water began to cover the floor of the dock, some of the water was carried up through the 36 or 40 air pipes from the culverts to a foot or so above the level of the cope of side walls—a height of nearly 32 feet from the floor. In questioning the necessity of fitting reflux valves on the ends of the discharge pipes, while an accident of the kind referred to in the paper might not happen once in many years, the damage might not be confined to the machinery alone, but vessels might be seriously damaged if the dock happened to get flooded while some of the plates were off or the shaft drawn, or under repairs of a similar nature. Occasions might arise where one or both sluice valves would get jammed up by pieces of floating timber chips, as had sometimes happened; in that case the reflux valves would be found extremely useful in keeping back the rush of water after the dock had been pumped out. The drainage pump would be quite capable of overcoming any leakage through the reflux valves until the obstruction in sluices was removed. Notwithstanding the views expressed by Mr Morton, the comparatively small cost of the reflux valves, their usefulness in certain contingencies which were liable to occur, and the absolute safety they afforded against accident in such an important installation, should be a sufficient vindication of the propriety of adopting them. It was very satisfactory to gather from Mr Morton's remarks on the combined and separate efficiencies of pumps and engines that those of this installation were in conformity with the best practice. The figures given of steam consumption had not been calculated from the indicator diagrams, but were estimated from a very rough measurement of the coal burnt during the trial, and a more accurate investigation would probably show that the actual consumption of steam would closely approximate to the figures indicated by Mr Morton; but, as it might have a tendency to mislead were the consumption understated, it was thought more judicious to be on the safe side and estimate the consumption at a higher rather than at too

Mr G. H. Baxter.

low a rate, especially as in a graving dock installation a very considerable amount of condensation took place in both cylinders and steam pipes. The consumption of fuel was comparatively greater than at Liverpool, on account of the arrangement for avoiding smoke. For this purpose, the furnace fronts were perforated all over in order to admit a large body of air over the fires, and no doubt the excessive amount of cold air admitted as compared with boilers of the ordinary type necessarily meant a larger consumption of fuel. Since this paper was written, by covering a part of the furnace fronts with sheet iron, and reducing the quantity of air admitted till just sufficient to prevent smoke, a considerable reduction in the consumption of fuel had been effected, although this had not actually been measured. While recognising the advantages of compound over simple engines generally, in the present case the advantage would not be all on the side of the former. The cost would have been at least £500 or £600 more, the exhaust steam pipes (which were at present 16 inches in diameter, led to the top of the chimney), the exhaust stop-valves and connections, and the feed-heater, would have required to have been much larger, and a higher pressure would probably have had to be adopted, so that, while no doubt a slight saving in fuel might have been effected, it was doubtful if it would have compensated for the extra cost. On the other hand, there were advantages in the simple engine which to some extent balanced the saving by the adoption of compound non-condensing engines. In making allowance for heat due to friction in pipes, this, as Mr Morton observed, might well have been neglected in estimating the power required to pump the dock, as it only affected the apparent relative efficiency at very low lifts.

Correspondence referred to in Mr Baxter's reply.

Messrs GWYNNE & Co., wrote (4th May, 1899).—In reference to the tests of machinery in last week's *Engineer* which, as you may be sure, have interested us considerably, we think you have made a mistake in calculating the friction in the pipes, as we have gone very carefully into this, and if the length of the pipes as given us by Messrs

Barclay are correct, the head due to friction is considerably higher, therefore the water H.P. higher, and in consequence the efficiency much better. . . . . .

One pump, we understand, has 19 feet of discharge pipe, and the other 68 feet of discharge, there is then 15 feet of 44-inch suction-piping on each side of the pump, or 30 feet in all for the two pumps. If these are correct we think you will find that the friction in the pipes, in forcing the quantity of water you name, instead of ·797, is 1·692. This increases the total head in proportion, also the water H.P. and the efficiency therefore would be ·232 instead of what you give; viz., ·189.

If you will let us hear from you on this point we will go over the other figures, and feel sure, if we show you that we are correct, that you will correct these figures in the *Engineer*, as it will very largely improve the efficiency of the plant.

Yours faithfully, GWYNNE & Co.

In reply to this Mr BAXTER wrote (15th May, 1899) acknowledging receipt, and said:—Regarding the head due to friction, you will see that I allowed for a total length of 100 feet of piping for each pump, but even if double this had been allowed it would make extremely little difference in the efficiency, especially at the higher powers, as will be seen on comparing the calculated results given in the following table:—

Length of pipes. Feet.	No. of Intervals.	h^1	H.	I.H.P.	W.H.P.	Efficiency
100	1	.797	2·547	901	170	·189
,,	9	·190	23·690	1331	777	·583
200	1	1·590	3·344	901	223	·248
,,	9	·380	23·880	1331	782	·587

Mr G. H. Baxter.

I have not had time to make the intermediate calculations which is hardly necessary, as it will be seen from the above that the head due to friction scarcely affects the efficiency at higher powers. . . .

Yours truly, GEORGE H. BAXTER.

Messrs GWYNNE & Co. wrote (17th May, 1899):—We are in receipt of your letter of 15th inst., for which we thank you and for the information you give us. We think, however, you have missed the point of our objection. In the high lifts, when the velocity is not so great, the friction we are quite aware does not make much difference to the efficiencies over and above what you have worked them out, but we scarcely think you will say that in the low lifts an efficiency of 23 per cent. is not very much better than an efficiency of 18 per cent. It is on the low lifts that the efficiencies appear so bad in your table, which should not be the case. We enclose you a table giving A, B, C, E, F, G, H, and J, and have shown in red ink [the figures referred to are in italics in this printed table] against your figures what we work out the alteration should be, which very much improves the performance of the pumps. You quite understand we do not wish to claim anything for the pumps beyond what they have done, at the same time we feel sure you wish to give the pumps full credit for what they have done. Under these circumstances we would ask you to communicate with Mr Parker, and ask him to correct these figures. . . . . .

We note you say in your calculations you reckoned on 100 feet of piping. Our calculation for the friction, however, is based on the exact length of piping shown on the drawing which does not amount to 100 feet.

We wish you to understand, therefore, that it is not the length of piping which we say is incorrect, but that the formula or figures that you have worked out for the friction is incorrect, and which is the cause of the difference between our figures and yours. We do not know what formula or figures have been worked out, however, but we are quite certain that they are incorrect, and if you will check over our figures you will find that the head due to

A	B	C	E	F	G	H	J
No. of intervals of 10 minutes each.	Q Average quantity of water discharged per minute through two 60″ pipes during each interval. Cubic feet.	V Mean velocity of discharge through two 60″ pipes during each interval. Feet per second.	h^1 Mean head due to friction in pipes. Feet.	H Total mean head pumped against during each interval $= h + h^1$ Feet.	I.H.P. Mean I.H.P. during each interval measured from diagram.	W.H.P. $= \frac{H \times Q \times 62{\cdot}5}{33{\cdot}000}$	Efficiency of pumps and engines $= \frac{\text{W.H.P.}}{\text{I.H.P.}}$
1	35,312	*14·99* 14·985	*1·692* ·797	*3·442* 2·547	901	*230* 170	*·232* ·189
2	34,100	14·475	*1·578* ·743	*6·786* 5·951	1062	*438* 384	*·412* ·362
3	30,750	13·05	*1·284* ·604	*9·876* 9·189	1176	*575* 535	*·489* ·455
4	26,010	11·04	*·918* ·432	*12·501* 12·015	1245	*616* 592	*·495* ·475
5	22,760	*9·66* 9·656	*·703* ·332	*14·911* 14·540	1285	*643* 626	*·500* ·487
6	20,825	*8·845* 8·838	*·589* ·277	*17·214* 16·902	1308	*679* 666	*·519* ·510
7	19,385	*8·229* 8·225	*·504* ·24	*19·337* 19·073	1325	*710* 700	*·536* ·534
8	18,235	7·74	*·450* ·212	*21·616* 21·378	1330	*747* 739	*·561* ·555
9	17,310	*7·348* 7·347	*·407* ·19	*23·907* 23·69	1331	*784* 777	*·589* ·583

Messrs Gwynne & Co.

friction is right. We are rather anxious to have some of these tables printed off, and would, therefore, be very much obliged to you, seeing that the table is the more valuable, as having been worked out by an independent person, if you will authorise us to correct these figures. . . . . .

Yours truly, GWYNNE & Co.

Mr BAXTER wrote in reply (22nd May, 1899) asking Messrs Gwynne & Co. what formula they used in calculating the heads due to friction—they replied on the 24th May as follows:—

We are obliged by your favour of 22nd inst., and return you your figures, which, so far as we can see, are quite correct in accordance with the formula you have used; it is the formula, however, which we take exception to.

We prefer and have always been accustomed to use Box's formula in practical Hydraulics, and we venture to suggest that this formula is very well known, and largely used.

If you work out the figures according to this formula, as per the particulars we give on the enclosed sheet, we think you will find the figures we have given are quite correct. . . . . .

The formula is as follows:—

$$H = \frac{G^2 \times L}{(3d)^5}$$

H = Head in feet due to friction.
G = Gallons per minute.
L = Length of pipe in yards.
D = Diameter of pipe in inches.

. . . . . .

You will see we have taken for one pump	68 ft.	of piping	60″	dia.
	30 „	„	44″	„
And for the other pump	19 „	„	60″	„
	30 „	„	44″	„

By taking the exact lengths of piping according to the arrangement of pipes, you will see it will be more accurate than assuming merely 100 ft. as has been done in the calculations you send us.

We shall be extremely obliged to you if you will confirm our figures, . . . and let us hear from you as soon as possible, as we are anxious to get the correct figures printed.

Yours truly, GWYNNE & Co.

Mr BAXTER wrote on 25th May acknowledging receipt, and said . . . I am however revising the discussion, and my remarks in reply to criticisms, and will include the gist of our correspondence, and propose to insert the table you made out, giving what you consider the figures should be, which I trust will be quite satisfactory to you.

Yours truly, GEORGE H. BAXTER.

On 2nd June Mr BAXTER sent Messrs Gwynne & Co. extracts from Mr Morton's remarks bearing on the pumps, stating that if they had anything to say in reply he would be glad to incorporate their remarks in the correspondence if they would like this done.

On 21st June they wrote, enclosing "some remarks of our Principals, and also some separate remarks of our Managers," adding, "We think you will probably get from these what you require."

These remarks are as follow:—

"The remarks of Mr D. H. Morton of Glasgow—on the paper read by Mr Baxter on "The Clyde Trustees' No. 3 Graving Dock Pumping Machinery"—is more a lecture on the history of centrifugal pumps than anything else it could be compared to.

Messrs Gwynne & Co., the designers and makers of the centrifugal pumps referred to, were called upon to send estimates and plans for suitable plant to empty the dock in a fixed time. The engines were to be provided and made by a Scotch firm, and were to be coupled to the pumps made by Messrs Gwynne & Co. of London. Of course, price was an important factor in the question, and competition with other makers had to be taken into consideration.

The emptying of a graving dock, which was done in a few hours

(and not frequently), did not warrant the expenditure on a costly plant of economical fuel-saving machinery. The interest on the extra cost of engines could not be paid out of the saving in fuel therefore it was no economy, but the reverse, to erect complicated engines for dry dock pumping. Were the machinery required for permanent and constant pumping, it would be a different matter, and then the most economical fuel-saving machinery should be adopted. Such was their constant practice, and they could refer to some of the most economical drainage plants in Holland and other countries where coals were costly and the pumping engines were daily at work for a large portion of each year.

The pumps at the Clyde Trustees' No. 3 graving dock were giving an efficiency, for the pumps alone, of about 76 per cent. at the maximum lift (allowing the engines to be very good ones), and that was an efficiency that few, if any, pumping plants in any of the graving docks in this or in any other country gave.

Could Mr Morton refer to any dock pumping plant, either designed by himself or others in this country, which gave as good a result?

Centrifugal pumps could be used with great advantage in dock work. The power of the engines could be employed from the commencement of the pumping until the finish—not at all points of the lift with the best (efficiency) result, but certainly enabling the work to be done in a comparatively short time with a certain (small) size of engine, and at a first cost which put other kinds of pumping plants out of competition.

The durability of properly constructed centrifugal pumping plants was very great, and any ordinary workman could drive and take charge of them, while the result obtained from them was very good indeed."

"They were pleased to see that the diameter of disc in large pumps was considered satisfactory, and were quite aware that there was a happy medium in the ratio of diameter of eyes to that of the periphery, within the limits of which the highest efficiency was obtainable. They

thought that it would be admitted that the comparison of the 54-inch pumps referred to, with the 60-inch ones at No. 3 graving dock, Govan, spoke unquestionably in favour of the latter. If it required 54-inch pumps (only 6 inches less than the latter) each to raise 250 tons of water per minute through a lift of 7 feet 3 inches, one would scarcely expect to get 367 tons per minute on the average raised through a lift of 27 feet, *as was done by the latter at the trials.* They quite agreed with the opinion expressed that in large pumps there was no temptation to make the diameter of disc larger than was necessary to secure efficiency, *as the size of the pump casing would be increased, and therefore also the cost.* This was surely obvious!

With small pumps it was often necessary to alter the relative proportions of eyes to disc diameters *to suit circumstances* which were sometimes not under control. However, in the case of the drainage pump in question, the ratio of diameters of disc to eyes (which was about 3·7 to 1) they did not consider at all excessive, and there were very many instances of pumps in practice doing excellent work in which this ratio was considerably greater.

As regarded the carrier bearings, placed in the suction bends to assist in supporting the impeller and its shaft, they considered these necessary to prevent springing of the shaft and consequent vibration. As to the obstruction caused by these bearings to the flow of the water into the disc, that was, after all, comparatively little, the ratio of the area of bearing to total area of suction pipe being so small (not anything approaching the usual ratio in smaller pumps) that they thought, in considering the question of efficiency, it was hardly worth taking into account. Certainly it was preferable to use such bearings to extending the stuffing-box bearings and boss of disc, which latter method would entail considerably more additional and needless weight without any improvement in the result. To the somewhat gratuitous remarks which Mr Morton made with regard to the form and size of pump casing, they would simply say that his sweeping assertions did not prove the infallibility of the views set forth. It was well known that no little diversity of opinion existed upon that point on which he so stoutly and uncompromisingly

affirmed his views, which were just as strongly repudiated by others generally esteemed well qualified and competent to judge.

With reference to the performance of the pumping machinery, they were pleased to see that Mr Morton considered the average discharge of 367 tons of water per minute from each pump throughout the lift to be good, although he proceeded in the next breath to make a somewhat disparaging comparision, and without any attempt at qualification of any kind stated this discharge from a 60-inch pump, with a velocity of flow ranging from nearly *15 feet* per second down to 7·3, was not more than many pumps with 54-inch pipes were delivering. He, however, carefully abstained from giving any information as to the height of lift through which these many marvellous machines were raising their load; nor did he give the slightest limit as to the seemingly insignificant matter of detail; viz., how much power was being wastefully absorbed by these ingeniously-devised inventions in performing their wonders.

In the critic's general and somewhat diffuse remarks in speaking of efficiency, they could not but admire the quite too generous admission that the efficiencies shown by the 60-inch pumps at Govan (viz., ·583 on 24 feet lift, *combined efficiency of engines and pumps*) "were probably about as good as were obtained in nine graving docks out of ten, and the engineers had no reason to be ashamed of them!" And having delivered himself of this masterly and most moderately measured mead of too faint praise, he sagely counselled and hopefully encouraged those much-to-be-envied engineers fortunate in having such an oracular adviser in the following weighty words:—"Still, they could do better by attention to little matters of detail here and there, because it was the aggregate of these little differences which made for high efficiency or low efficiency."

Mr Baxter—It would be gathered from the remarks of Messrs Gwynne & Co. that, their principal object was to show that from their point of view the combined efficiency of pumps and engines at the low lifts should be 23 per cent., as against 19 per cent. according to his calculations; the results being arrived at by the use of different

formulæ. Which was the most accurate formula should be left to the decision of experts who had investigated the subject. Perhaps both were more applicable to hydraulic works in which the piping was very much longer and the effect of friction much greater than in this instance. Indeed, as Mr Morton observed, it would make very little difference if, in dock-pumping machinery such as this, the effect of friction were left out of account altogether. At the high lifts, however, their figures agreed almost exactly with his. And as the pumps were designed specially to work with greatest efficiency at the high lifts, it was satisfactory to find that the same good result was arrived at by both formulæ. Much of their criticism on Mr Morton's remarks confirmed what he had already said in reply thereto. In conclusion, he had to express his acknowledgments to his colleague, Mr Deas, for affording him the use of the necessary plans and sections, etc., of the dock, for the purpose of illustrating the paper, and to thank those members who had so kindly contributed to a very interesting discussion.

COMPARISONS OF SIMILAR STRUCTURES AND MACHINES.

By Prof. ARCHIBALD BARR, D.Sc. (Member).

(SEE PLATE XX.)

Read 21st March, 1899.

IN 1875 the late Professor James Thomson read a paper before this Institution on "Comparisons of Similar Structures as to Elasticity, Strength and Stability."* My object in the present communication is to direct the attention of Members anew to the very important and far-reaching principles brought forward in that paper, to offer some further illustrations of those principles, and to apply a similar mode of reasoning to questions involving kinetic as well as static actions.

The principles upon which we may arrive at an estimate of the relative suitability of large and small structures of similar design, as regards the various conditions upon which their safety or permanence depend, are of great practical importance. This will be manifest on consideration of the methods by which the engineer must proceed in designing works for which he is to be responsible.

It is easy enough, in many cases, to deduce from more or less fundamental principles, a set of formulas which will enable the draughtsman to calculate out dimensions for the members of a structure or of a machine, and the less the draughtsman knows of sound engineering science the more will he be disposed to place a blind confidence in the results arrived at. Before one can deduce such formulas, however, it is necessary to state the problems in mathematical form, and this involves the making of a number of assumptions, which, at the best, can be only approximately justified, and in many cases the assumptions made are very far from expressing the conditions of actual practice.

The physicist or the chemist may state a problem for himself

* Volume XIX, Session 1875-6, p. 59.

and eliminate in great measure, possibly entirely, all extraneous and disturbing elements, and so arrive at very definite and trustworthy results from the data with which he sets out. The chemical investigator has to do, for the most part, with the reactions of practically pure elements and definite compounds, under conditions that he is free to prescribe for himself; and the physicist, in the majority of cases, deals in his mathematical investigations with more or less hypothetical forms of matter, and with definitely specified forces—as, for example, when he deduces results regarding the stresses in a perfectly elastic solid, or the motion of a body guided frictionlessly in a path of given form under definitely prescribed conditions. But it is otherwise with the engineer. He has to deal with substances the properties of which it is not in his power to arbitrarily prescribe; he cannot eliminate, and he must not neglect, the influence of impurities and defects in order to make the facts fit with his hypotheses; nor has he completely under his control the forces which his work is to withstand. He must use such materials as are available on the commercial scale with all their complex and undefinable qualities and defects, and he must allow his structure or machine, when completed, to be subjected to such forces as may chance to come upon it under conditions that can never be fully prescribed or predicted.

The questions that arise in engineering practice are therefore of an altogether different order of complexity from those that the mathematician would choose in setting himself a problem for solution. It is not too much to say that there never was and never will be a mathematician or engineer who could, by any process of calculation from first principles, arrive at the minimum dimensions that would suffice for a single bolt or rivet in a locomotive or in a ship, even if he had a perfect knowledge of all the physical properties of the material of which the bolt or rivet is to be made. Indeed to such problems no definite solutions are possible, in as much as there is no assignable limit to the magnitude of the forces that *may* come to act upon the structure

or machine at some time or other in the course of its service. It is for such reasons that a so-called "factor of safety" of 5 or 6, or more, must be introduced when using formulas of the kind above referred to. In most cases such factors express, not the superabundance of strength in the work, but the unjustifiable character of the assumptions and the inaccuracy of the data upon which the formulas are founded. Indeed, an engineer who would deliberately make a structure 5 or 6 times as strong as it need be, would be guilty of culpable extravagance.

But it is seldom that the engineer is called upon to make a design that is conspicuously novel in regard to the elements of which it is composed—or at least it is not often that he is bold enough to adopt conspicuously novel elements, even in cases where such might advantageously be introduced, were a complete knowledge of all the conditions available. Almost all progress in engineering design consists, and must consist, in a gradual advancement from familiar and well-tested practice. Variation and the survival of the fittest are almost as important factors in the evolution of works of human art, as is the development of forms in animate nature—though the variations may, in the former case, be deliberately planned. When railway carriages were first required, the demand was met, naturally enough, by a slight modification of the stage-coach, and even yet in some of the features of modern cars there are traces of the parentage from which they sprang. So also when mechanical hammers were first brought into use, they were as nearly as possible the familiar sledge-hammer worked by mechanical contrivances designed to imitate the human actions to be replaced.

The best that the most highly-trained engineer can do in many, if not most cases—as regards the general features of a design, and still more in the proportioning of parts—is to draw upon his own experience or that of others, and to take some guidance from dynamical principles in modifying familiar forms to suit more or less novel conditions or requirements.

It is obvious then, that one of the commonest (and it should be

one of the simplest) steps that an engineer is called upon to take, is one in regard to the dimensions of a structure or machine, with little or no important change in the general character or functions of the parts. Few bridge-builders take such departures from recognised designs as are represented by the Britannia Bridge or the Forth Bridge, and even such designs embody the results of a vast accumulation of previous experience in regard to the behaviour of materials under conditions of engineering practice, and in the due proportioning of structural elements—experience that could not be replaced by any mathematical deductions from first principles. But every bridge-designer is called upon to modify his previous practice in regard to dimensions at least. Similarly every engine-builder is called upon to design engines of different powers. A marine engineer who has gained the bulk of his experience in the construction of engines for large war vessels or merchant ships, may be called upon to scheme out a set for a small destroyer. In all such cases, while the results of past experience—either one's own or some other's—must be appealed to, the familiar and successful practice must be modified according to true principles, in order to be safely applied to the new conditions.

No apology, therefore, need be offered for discussing here the bearings of the magnitudes of similar structures or machines upon their suitability for the purposes they are designed to serve. Indeed, the subject may be considered a specially appropriate one to bring before the members of this Institution, in as much as the principles to be enunciated and illustrated have applications in all branches of engineering and shipbuilding practice.

I propose, then, to discuss the bearing of the magnitudes of structures and machines, upon their detailed design, or, on the other hand, the suitability of the same design to be carried out on different scales. In respect to structures,* we shall have to con-

* "The works of human art to which the science of applied mechanics relates are divided into two classes, according as the parts of which they consist are intended to rest or to move relatively to each other. In the former case they are called *structures*; in the latter *machines*."—*Rankine's Applied Mechanics.*

sider how a change in dimensions of the structure in regard to its main features should affect the design in respect to details; and in the case of machines, we shall have to consider not only that question, but also the relation between the maximum speeds at which similar machines may be safely run. We may then deduce, from the results arrived at, some conclusions regarding the relations between the weights and powers of engines and other machines of similar design but of different magnitudes.

By "similar structures" we mean structures not only alike in all their proportions (that is, constructed from one drawing, with only the scale altered) but formed, at corresponding parts, of the same kind and quality of material. It should be observed at the outset that such perfect similarity as we assume is hardly attainable in practice. Most materials with which the engineer has to do, have physical constitutions of a coarseness quite comparable with the dimensions of the pieces which form the elements of structures and machines. Large and small pieces of such materials are therefore not strictly—and in some cases not even approximately—similar in qualities. Thus, while a beam of oak 12 ins. square by 10 ft. long may be very approximately similar to a beam 2 ft. square by 20 ft. long, it will be obvious that a piece $\frac{1}{10}$ in. square by 1 in. long will be essentially dissimilar in structure to either, inasmuch as the fibres and ducts of the timber will, in the small piece, have relatively great dimensions. So, again, the fibrous structure of wrought iron (or the crystalline structure of cast iron or of stone) introduces a dissimilarity in the constitution of large and small pieces produced in a similar manner, or cut from the same block. If, on the other hand, we attempt to get in a rod of wrought iron $\frac{1}{8}$ in. diameter, a fineness of fibre that would make it similar in physical constitution to an ordinary bar 1 in. in diameter, we know that in the process of preparation the tensile strength of the material will be much increased, though the chemical composition may remain practically unaltered. Strict identity in quality is thus hardly attainable in such materials on a large and on a small scale. And again, the character of work-

manship attainable in structures is largely dependent upon the dimensions of the parts.

We must, however, for our present purpose, neglect such differences, and assume that we can have two simple or complex structures strictly alike in all respects except in dimensions.

Comparative Strength of Similar Structures.—Two similar portions of matter are said to be alike severely stressed when they are subjected at all corresponding parts, to stresses of the same kind and of the same intensity per square inch over corresponding surfaces or *interfaces.**

In the paper already referred to, Professor Thomson enunciated and proved a theorem which we may state thus:—Two similar portions of matter will be alike severely stressed across all corresponding interfaces, when the forces to which they are subjected *from without* are applied over corresponding areas, and of like intensities and directions at corresponding places, Fig. 1.

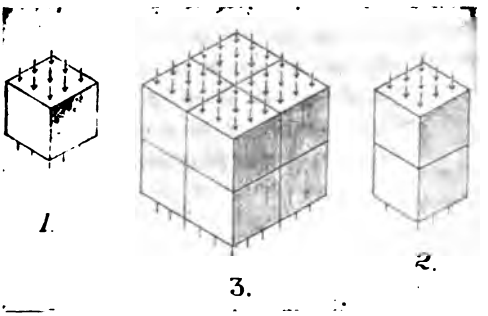

Fig 1.

Thus, if we take a large and a small globe of the same kind of material, each having drawn upon its surface a map of the world, and apply over the areas representing Great Britain similarly disposed pressures of 100 lbs. per square inch, and

* The word "interface," introduced into the language of mechanics by Professor Thomson, is sufficiently self-explanatory, and its use avoids such a manifest abuse of language as is involved in the expression *internal surface.*

balance these by forces distributed over the areas representing Australia and similarly disposed in the two cases, then the materials of which the globes are made will be alike severely stressed at all corresponding parts; that is to say, for example, the push stresses across the equatorial sections will be similarly distributed, and will have the same intensity at corresponding places. This consideration leads to a statement of what we may call *the principle of similar structures in respect to strength*: — Similar structures are alike suitable to bear loads similarly disposed, and of the same intensity at corresponding places.

Thus we see that, *neglecting all other causes of stressing*, similar pipes are suitable to bear the same internal water or steam pressure. If, for example, one pipe be double the diameter of another, it must also have double the thickness of metal in order that it may be alike suitable to bear the same internal pressure. If a cast iron pipe 12 inches in diameter and 1 inch thick is suitable to bear a water pressure of 400 lbs. per square inch, one 10 feet in diameter and 10 inches thick, and one 1 inch in diameter and $\frac{1}{12}$-inch thick, will be alike suitable to bear the same internal pressure if of the same quality of cast iron. Again, two similar boilers, one double the dimensions of the other in every detail, are alike suitable to bear a given steam pressure. Similar masts carrying similar sails and rigging, are alike suitable to bear the same wind pressure. Similar floors, whatever their absolute dimensions (assuming them to be weightless), are alike suitable to bear the same load per square foot; they are, for example, alike suitable to bear a crowd covering the whole surface. Two similar foot-bridges, however complex in design, are alike suitable to bear the weight of a crowd and to bear a given wind pressure, and this applies equally to the flooring, joisting, girders, piers and foundations. Note carefully that here we are only considering the stresses due to the weight of the crowd and to the pressure of the wind. We shall see, later on, how the weights of the structures themselves affect the question. Similar roof frames are alike suitable to carry coverings

of the *same* kind and the *same* thickness, the *same* depth of snow, and the *same* wind pressure—not *similar* thicknesses of covering and *similar* depths of snow. Similar cylinders with similar pistons, piston rods, &c., are alike suitable to bear a given steam pressure.

Inasmuch as the areas of similar figures are as the squares of their linear dimensions, we see that pressures of the same intensity over corresponding areas produce total loads proportional to the squares of the linear dimensions. We may therefore state the principle above enunciated in another form:—Similar structures are alike suitable to bear total loads proportional to the squares of their linear dimensions, applied in similar directions at corresponding places.

Thus, if we double the height, double the diameter and double the thickness of a column, it will be able to bear four times the former load. Similar shafts (such as those represented in Fig. 2) are alike suitable to bear, at similar places (say the ends of the similar cranks) loads proportional to the squares of the linear dimensions; and, since the arms are as the linear dimensions, it follows that similar shafts are alike suitable to bear torques having magnitudes proportional to the *cubes* of their linear dimensions. To take a more complex example; suppose we construct two exactly similar jib cranes, one double the size of the other in every detail, then, if the smaller is, in every detail, suitably designed to work under a load of 20 tons, the larger one will be suitable, in every detail—size of chain, jib, pins, teeth and arms of wheels, diameters of shafts, etc., etc.—to bear an 80 tons load, so far as the stresses due to statical loading are concerned.

Deformation of Structures.—Two portions of matter which are similar in form and in substance when unstressed, will, when alike severely stressed, suffer *similar* deformations (or *strains*).

Two structures or pieces, originally similar in form, will therefore be strained to similar forms when subjected to loads of the same intensity at corresponding places; or to total loads proportional to the squares of their linear dimensions. All *angular* strains will

then be the same in the two cases, and all *linear* strains (extensions, deflections, etc.) will have magnitudes proportional to the linear dimensions.

Applying this principle to the case above considered, Fig. 2, we see that similar shafts carrying at similar arms loads proportional to the squares of their diameters will be twisted through the *same angle*. But the lengths of the shafts are as the linear dimensions. Hence the angle of twist per unit length is smaller in the larger shaft in the ratio of the linear dimensions. But the torques are as the *cubes* of the linear dimensions. To twist the two shafts through the *same angles per unit of length*—through the *same* angle on the *same* length—will require torques proportional to the fourth powers of the linear dimensions. We see, therefore, that while the strengths of similar shafts (expressed in the maximum torques they can safely bear) are as the cubes of the diameters, the stiffnesses (expressed as the torques that will produce the same total twist on a given length) are as the fourth powers of the diameters.

We may apply the same principle to the important question of standard tests for structural materials:—Test pieces having *similar* forms will give similar results if of like material.

Thus, if a specimen of steel 1 inch in diameter and 10 inches long, shows a test strength of 25 tons per square inch of original section, and an elongation of 30 per cent., a specimen ½-inch in diameter and 5 inches long (if of like material) would give the same results if similarly tested. But a specimen ½-inch in diameter and 10 inches long will not do so. This last specimen is not *similar* to the others. In specimens of ductile material, the local extension, which takes place after the maximum load is passed is a function of the transverse dimensions, whereas, the general extension which the specimen suffers before the maximum load is reached, is a function of the length of the specimen. In Fig. 3 a specimen of wrought iron or of mild steel is shown at different stages of a tensile test. The specimen before the load is applied is represented by A. The first effect of the tension is to pro-

duce general extension over the whole length of the piece. This holds until the maximum load is reached, when the specimen has such a form as that indicated in diagram B. The specimen will still be approximately parallel, each inch of its length having suffered the same extension, and consequently the same reduction in diameter, except in so far as the heads give lateral support, and so prevent the reduction in diameter taking place as freely in their vicinity as in the central portion. The percentage of general extension is therefore very approximately the same whatever the length of the specimen. Ultimately, however, the specimen begins to contract locally, and at the instant of fracture it has such a form as that shown in diagram C. It will be readily understood that the form of the constriction will be practically the same whatever be the length of the specimen as indicated by diagrams C and D, and therefore the local extension accompanying this reduction in the region of fracture will depend upon the diameter and not on the length, that is, it will be the same in amount for all specimens of a certain diameter whatever be their lengths. The local extension will therefore be a large percentage of the original length in the case of specimens which are short in proportion to their diameters, and a small percentage of the length in the case of specimens that are long in proportion to their diameters, The total extension, when fracture takes place, is, therefore, a larger percentage in the case of short stout specimens than in the case of long shaped ones of the same quality of material. But the forms assumed by *similar* specimens are the same whatever their magnitudes, if the quality of material is the same, and therefore such specimens will give the same percentage elongation. The length of a test specimen should, therefore, bear a constant ratio to the diameter (or breadth and thickness) if comparable results are to be obtained. Engineers usually specify that the steel to be used for a particular work must give a percentage elongation of, say, "28 per cent. on a length of 10 inches." That is not a specification of a particular quality of material. If the steel maker chooses to take a specimen of large enough transverse

dimensions, he will get 28 per cent. extension from very inferior steel. The *proportions* of the specimen, not the length, should be specified. No doubt it is more convenient—and cheaper—to prepare plate specimens all of one length, irrespective of their thicknesses, since a number of specimens of different thicknesses can then be machined together; but engineers should understand that they are leaving the steel maker a very great latitude, as regards the quality of material he supplies, when they specify the tests in the usual way. It is to be hoped that engineers in this country will come to agree upon standard *proportions* for tests specimens. In America, sometimes at least, specifications now give the proportions, as for example, when the extension is specified for a specimen "ten diameters in length."

Another important case is that of bending tests of thick and thin plate and bar specimens. This case was referred to in Professor Thomson's paper. We see at once, from the general principle, that thick and thin specimens will be alike severely stressed when bent to curves having radii proportional to their thicknesses. It would seem to be by no means generally understood that a thick plate will be just as capable of enduring a doubling over, cold, as a thin plate of the same quality of material, — if the doubling be performed in a similar manner.

Influence of Weight of Structures.—Two similar objects have weights proportional to the cubes of their linear dimensions, whereas, the stresses which they are capable of bearing at corresponding parts increase as the squares of their linear dimensions. We have then the principle that:—The weights of similar structures therefore increase, with increase of dimensions, in a higher ratio than the loads which the structures are alike suitable to bear. Take, for example, two similar square pillars carrying similar cubical masses, as illustrated in Fig. 4. Let all the linear dimensions of the second be double that of the corresponding linear dimensions of the first. Then whereas the larger pillar has four times the cross-sectional area of the smaller one, the larger cube is built up of eight of

the smaller cubes. If, then, the smaller structure is just suitable to bear its own weight the larger one will have only half the suitable strength of pillar. It will be observed that if the larger structure be drawn on a scale of $\frac{1}{2}$-inch to the foot, and the smaller on a scale of 1 inch to the foot, the two drawings will be identical. If, then, the draughtsman has had experience in designing such structures of the smaller size, it will be evident that his eye, or his sense of suitable proportions, will hardly be a good guide to him in designing the larger one. It will be seen, then, that the larger a structure is made the less suitable is it to bear its own weight; and with a change in general dimensions we must make a change in the design (or in the materials) when the weight of the structure itself is important. The simple process of changing the scale which we saw was suitable in passing from a small boiler to a large one, under the conditions of loading assumed, will not do in this case. The smaller a structure is made the more slender it may be in its proportions so far as suitability to bear its own weight is concerned. A few illustrations from nature may be interesting and instructive. Look at a picture of a spider, Fig. 5. The body of the *Phocus Phalangioides* is an $\frac{1}{8}$-inch in diameter, and the legs are 2 inches or more in length—and very crooked at that. Then look at a picture of an elephant, Fig. 6. The body measures 8 to 10 feet in length and say 5 feet in diameter. Imagine an elephant weighing 5 tons, and having crooked legs 80 to 90 feet long and 6 inches diameter! Then again, a spider, or even a lot of spiders and flies, can walk about on a web 15 inches diameter and constructed of fibres about $\frac{1}{1000}$-inch in diameter, in meshes say $\frac{7}{10}$-inch wide. Imagine long legged elephants on a web, 600 to 700 feet in diameter, made in meshes 30 feet wide and of cords $\frac{1}{2}$-inch in diameter! You will notice that Nature not only makes the elephant's legs proportionally very much larger in diameter than the spider's, but, moreover, makes them as nearly straight and vertical as possible, while the spider's are crooked and by no means vertically under its body. We have both a change of

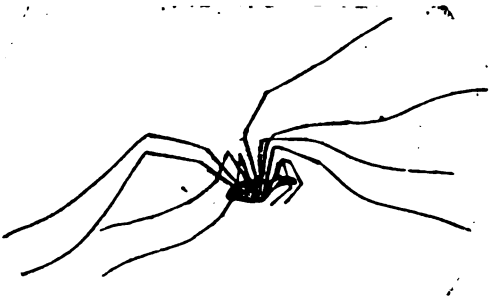

Fig. 5.

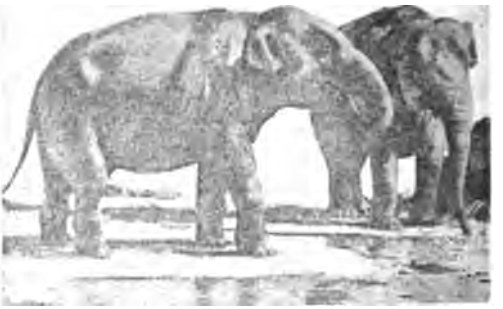

Fig. 6.

Fig. 7.

general design and a change of proportions. Look again at the skeleton of a cat, Fig. 7, and the skeleton of an elephant, Fig. 8,

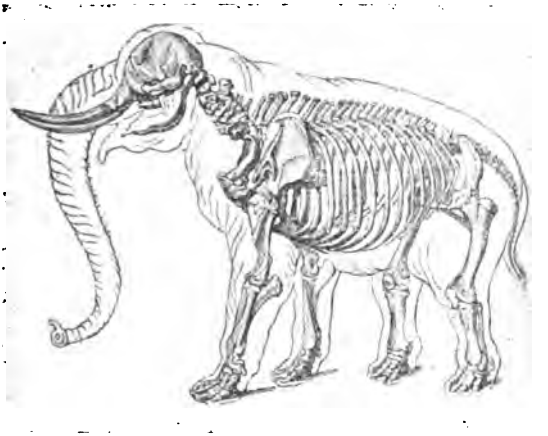

Fig. 8.

and you will see how Nature, for functional reasons, takes liberties in the design of small creatures in respect to the bearing of

Fig. 9.

their own weights, whereas, in the case of large creatures the design is that best suited to support the load. An animal having

a body two or three times the linear dimensions of an elephant's would require legs nearly filling up the whole space under its body. Look again at the proportions of diameter of legs to the diameter of body in such a series of birds as the skylark, Fig. 9, the ostrich, Fig. 10, the moa, Fig. 11. (The latter extinct bird stood some 10 feet 6 inches in height, and had legs about 5 feet long. Notice the great diameter of the leg bones.)

There is then an absolute limit to the dimensions which a structure of given materials and given form can have. Thus, a parallel rod of iron 3,300 feet in length will, if hung up vertically, be subject to a tension of 5 tons per square inch at its upper end. A rod about three miles in length (in its unstressed condition) would just break by its own weight if the iron had a tensile strength of 23½ tons per square inch and a density of 480 lbs. per cubic foot. It is interesting to note that a rod of aluminium which would just break by its own weight would be of about the same length. This length, which is sometimes called the "length modulus of rupture" for the material, is independent of the transverse dimensions of the rod. So, again, a parallel column of stone can only be built to a certain height depending upon the relation between the density and the crushing strength of the material. A pyramid or cone could obviously be built to three times the limiting height of a parallel column, and the height is independent of the angle of slope, assuming the stress at the base to be uniformly distributed. Thus the three structures represented in Fig. 12 would be equally severely stressed at their bases if built of the same material. The column which would have equal intensity of stress at every cross section, due to its own weight, would have the form shown in Fig. 13, assuming it to have a uniform density and to be of square, circular, or other constant form, at all sections. The profile is a logarithmic curve and the height infinite. If such a column were to be built of granite, weighing $\frac{1}{14}$-ton per cubic foot, and were to be everywhere subject to a stress of 80 tons per square foot, we find that the diameter of the column would be 4,480 feet at the section at which

Fig. 10.

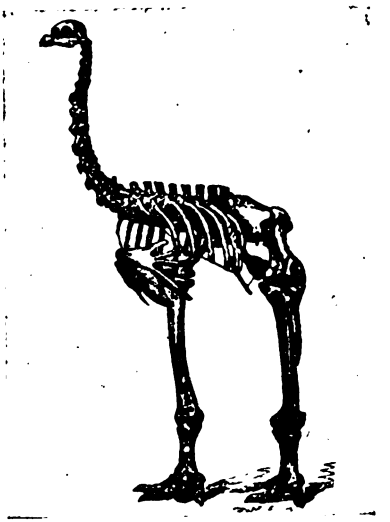

Fig. 11.

the profile has a slope of 45 degrees. The same figure inverted will represent the profile of a hanging rod that will have equal intensity of stress over all sections.

Fig. 14 represents a railway water-tank and its supporting column. Suppose a tank of double the linear dimensions were required. If the column were made of the same proportions externally as the original one, it would require to have fully four times the thickness of metal—that is, it would have to be fully twice as thick in proportion to its diameter. This is illustrated by Fig. 15, which is the larger tank drawn to half the scale of Fig. 14. Make the structure large enough, and the column would require to be solid; larger still, and a solid column of the same external proportions would be crushed.

Again the same proportions will not do for the tanks themselves. Similar tanks are not alike suitable to bear the water that will fill them, because the pressures per square inch in the larger tank will be greater than those at corresponding parts of the smaller tank, on account of their greater depths below the water surfaces. But *similar* tanks would have weights proportional to the cubes of the linear dimensions, and would hold quantities of water proportional to the cubes. Hence the weights of metal in large tanks of given proportions (say cubical tanks) must be greater, per gallon of water carried, than those of smaller tanks of the same form. Hence small tanks are more economical of material than large ones. Ships floating in still water are practically tanks turned outside in. We see then that (neglecting all other considerations) to make 1000 tons of steel support the greatest weight of cargo in still water, we must make it into a large number of very small boats. Or, again, small boats of like proportions to large ones may be made of weaker materials.

Calculating the stresses in a beam by the usual formula, we find that in a solid rectangular beam of uniform section, supported at its ends, the maximum push and pull, due to the weight of the beam itself, are given by the formula:—

$$f = \frac{3}{4} w \frac{L^2}{H},$$

where f is the unital stress (stress per unit area), w the weight per unit volume, L the length, and H the depth,—corresponding units being used throughout. The formula may be written :—

$$L = \frac{4}{3}\frac{f}{w}\frac{H}{L} \text{ or } \frac{H}{L} = \frac{3}{4}\frac{w}{f} L.$$

Thus if $f = 4000$ lbs. per square inch, and $w = 0{\cdot}26$ lb. per cubic inch, we find the maximum length for a beam 1 inch in depth to be 143 inches, or say, 12 feet. If we take L equal to the span of the Forth bridge, viz., 1,700 feet, or 20,400 inches we find that the ratio of depth to length would be nearly unity. That is, a solid cast-iron beam of rectangular section, and of 1,700 feet span, would require to have a depth of 1,700 feet in order that the pull stress, due to the weight of the beam itself, should not exceed 4,000 lbs. per square inch. In other words, the beam would be a square plate set up edgewise. Assuming the ordinary formula to hold good, no increase or diminution of the breadth affects the result.

In no case, however, have we to do with structures which have to bear only their own weights. In railway bridges we have to consider the weight of the structure itself, and also the weight of the heaviest load that may come on the rails. A peculiarity of the case is that, on a given line, the load to be carried on all the bridges is approximately constant per foot run. Now similar beams are capable of bearing loads of the same intensity over their upper surfaces, that is, loads per foot run increasing in proportion to the linear dimensions. When, then, the structure is small, so that its own weight is unimportant as compared with the load it can carry, the transverse dimensions of the girders do not require to be increased so rapidly as in proportion to the span. With increase of span, however, the weight of the structure becomes more and more important. Accordingly we find cast iron girders suitable for small spans; for larger spans cast iron girders would be too heavy and plate girders are used; then lattice girders; and so on to the largest

spans where suspension or cantilever bridges alone are possible with such materials as are at present available. Notice that in suspension and cantilever bridges the greatest weight of structure per foot of span occurs at the piers where it produces least effect, whereas, in simple girder bridges the weight is mostly concentrated at the centre of the span where it produces the greatest effect. But even with this very favourable element in the scheme, the Forth Bridge had to be designed almost entirely to bear its own weight and wind pressure. Had the bridge been designed as a monument or an ornament, and not to carry any railway tracks —assuming the same general outlines—it would have had to be almost as strong as it is for the same security.

It may be interesting in this connection to compare the spans and depths of girders in the Britannia and Forth Bridges. The proportions are :—

Britannia Bridge—Greatest depth of girder 30 feet, span 460 feet, ratio 1 to 15·3.

Forth Bridge—Greatest depth of girder 350 feet, span 1710 feet, ratio 1 to 4·9.

The span of the Forth Bridge is thus 3·7 times the span of the Britannia Bridge, but the depth of girder (the double cantilevers are girders supported at their centres) is 11·4 times as great.

It should be understood that though the ratio of depth to span is here almost exactly in proportion to the spans as given by the formula on p. 339, there is no direct connection between the two cases, except that both are illustrations of the general principle that like proportions will not suit for large and small spans.

Fig. 16 shows half spans of the two bridges on the same scale. In the same figure the Britannia Bridge girder is also shown magnified to have the same span as the Forth Bridge for comparison with it as to proportions.

We are given to understand that Gulliver found the Lilliputians wonderful mechanics. They might well be, at least in respect to the comparative magnitude of the works they could execute.

It would be an easy task for a Lilliputian engineer to erect a Lilliputian Forth Bridge. The Brobdingnagians must have had about as much as they could do to support themselves.

Stability of Structures.—We have seen that two similar structures are, in respect to strength, alike suitable to bear the same intensity of pressure over corresponding areas; in that respect the actual dimensions of a structure are immaterial. Again, we have seen that so far as strengths to bear their own weights are concerned, small structures have an advantage over large ones. On the other hand, we shall find that in stability to resist overturning by a given intensity of distributed pressure, large structures have an advantage over the small ones. In Fig. 17 two similar obelisks are represented, one double of the dimensions of the other. The weight of the larger column is eight times that of the smaller; and—assuming that the edge does not crush when the obelisk is tilted—the arm at which the weight acts against overturning is double of the arm in the smaller structure. The moment of stability is therefore sixteen times as great—that is, the moments of stability of similar structures vary as the fourth powers of their linear dimensions. But the larger structure exposes to the wind four times the area that the smaller one presents, and the centre of pressure is twice as high. Hence for a given wind pressure the overturning moment is eight times as great, while, as we have seen, the moment of stability is sixteen times as great. The larger structure will therefore be able to resist a wind pressure twice as great as that which the smaller can withstand; or in general:—Similar structures are capable, as regards stability, of withstanding wind pressures—or other distributed forces—similarly applied and of intensities proportional to their linear dimensions. This principle is applicable to all cases of structures depending for their stabilities upon their own weights. It will no doubt bring up, in the minds of most of us, the recollection of futile attempts to ballast model yachts so that they would sit to even a mild breath of wind, and many of us will also remember our wonder that we could not imitate the practice

of the shipbuilder. We see that a model one foot long, similar in every respect to a ship 100 feet long, will heel over in a breath of wind to the same angle as the ship would have in a breeze or gale of 100 times the strength.

It follows, from the principle enunciated, that structures having similar exterior shapes need only have weights varying as the squares of their linear dimensions in order that they may be alike capable of withstanding the same wind pressure—always assuming that the material is nowhere crushed. We arrive, therefore, at the rather remarkable result that chimneys built of the same material, and having similar external forms, would, if they behaved as rigid bodies, require to be all of the same thickness, irrespective of their other dimensions, in order to be alike suitable to resist a given wind pressure. (Not exactly so, since the volume of the brickwork is not quite equal to the external surface multiplied by the thickness. The larger chimney would, on the assumption made, require a *less* thickness of wall than the smaller one). Accordingly, we find that chimneys of, say, 25 feet, 100 feet, and 435 feet in height, have such proportions as are shown in Fig. 18;—the last diagram is a section of St. Rollox chimney.* Of course, stability of the chimney as a whole, considered as a rigid body, is not the only condition to be attended to in the design, and consequently the most suitable proportions in practice are not quite those deduced from the principle at present under consideration.

We have another remarkable result. *Similar* obelisks can withstand the *same* wind pressure if they stand on bases of the *same* size. Cleopatra's Needle—of which the Institution possesses a beautiful model in bronze—has a height of 67 feet, and weighs about 200 tons. Near the base the breadth on the wider faces is about 8 feet, but it is reduced at the base to about 5 feet in diameter, as shown in the middle diagram of Fig. 19. If no crushing took place, a wind pressure of about 85 lbs. per square foot would be required to overturn it. Now, an obelisk of twice the linear dimensions of the needle, and one of half the dimensions,

* See Rankine's Applied Mechanics—Appendix.

would require the *same* breadth of base to make them alike suitable to bear the same wind pressure, Fig. 19.

It may be of interest to note that an obelisk, built of blocks, which would have equal stability at all its sections, would have a profile of parabolic form as shown in Fig. 20,—supposing no crushing or sliding to take place at any section. Contrast this with the obelisk having uniform stress at all sections, in virtue of its own weight, which is shown in Fig. 13. For obelisks circular in plan, the proportions are given by the formula—

$$H = \frac{15\,\pi\,w}{16\,p}\,R^2$$

where H is the height from the section in question to the summit, R the radius of that section, w the weight per unit volume, and p the pressure per unit area;—assuming that the pressure acts as it would on a flat surface of the dimensions of the central vertical section. If, for example, we calculate for an overturning wind pressure of 150 lbs. per square foot, and take w as 150 lbs. per cubic foot, we would have a diameter of base equal to about 8 feet for a height of 50 feet.

The animal kingdom again supplies us with interesting illustrations of the principles here discussed. Insects that have long legs have spreading legs, and moreover they have very commonly suckers or other holding on mechanisms on their feet. Large animals have much smaller *bases* in proportion to their dimensions. The spider with its spreading legs, and the elephant with its feet close together, afford such a contrast, Figs. 5 and 6; so also do the skylark and the ostrich. The skylark's feet extend over nearly the whole area under its body—the ostrich's feet are comparatively very small and very close together, Figs. 9 and 10. The skylark does not require its long claws for gripping on to branches, though possibly it may have inherited them from ancestors that did perch; but in any case the gripping of branches by small birds is in itself an evidence of their want of stability.

The rolling of pebbles by a stream, or by a wind, that fails

to roll large stones and boulders is another illustration of the comparative instability of small objects.

Suspension of Bodies in Fluids.—We now pass to the consideration of some questions involving kinetic actions. Similar objects falling through air or water present areas proportional to the squares, while they have weights proportional to the cubes, of their linear dimensions. The weight per unit area therefore increases as the dimensions. Now for similar objects of other than very minute dimensions, the resistance to motion through air or water varies nearly as the area and as the square of the velocity. Large objects therefore attain a higher velocity in falling than small ones, since a higher velocity will be necessary in order to make the resistance equal to the weight. It follows that an upward current which will just support a given object will be insufficient to support a similar object of larger size. Hence dust is carried up by an air current that fails to raise stones, and a river entering the sea retains particles of mud in suspension for a longer time than it can carry grains of sand, and consequently the mud is taken further out to sea than the sand. This is a principle the consequences of which have been of far reaching importance in geological history.

In making a short digression into meteorology, I would plead as excuse that the questions to be dealt with have a close bearing upon the subject we are considering, and, moreover, that we owe much, if not most, of our knowledge of these matters to engineers, such as James Thomson, Aitken, and Reynolds.

It used to be commonly supposed that the particles forming a fog or a cloud consisted of small vesicles or bubbles of water, filled with some very light gas. This extraordinary conception arose from the supposed necessity of finding some explanation of the suspension of these particles in the air. The process of formation of such vessicles, and the presence in them of gas which was lighter than air, though subject to a very considerable pressure on account of the capillary contractility of the envelope, were mysteries never explained. But the principle just

given will suffice to indicate that very small particles of water will fall very slowly in still air, while a very slight upward current will suffice to keep them from descending at all. In the case of very small particles, Stokes has shown that the resistance at a given velocity varies as the diameter of the particle, not as the area, and he calculates that a droplet of water $\frac{1}{10,000}$-inch in diameter would fall in still air at a rate of not more than one inch per minute. Aitken has shown that the globules forming a fog or cloud consist each of a film of water condensed upon a particle of dust. The core is therefore solid, not gaseous.

The formation of raindrops is readily explained in many cases by the fact that, if, from any cause, some of the particles in the upper region of a cloud become larger than others, these will fall more rapidly, overtake those beneath them, and so fall still more rapidly, gathering up more substance as they descend in the manner roughly indicated in Fig 21.

Prof. Reynolds has explained in a similar manner the formation of ordinary or normal hailstones. Hailstones are not frozen raindrops. Frozen drops are indeed seldom seen, but I have myself twice observed frozen raindrops falling. They were clear spheres of ice, or in some cases, if not always, apparently two spheres, a larger one and a smaller one stuck together. They were not much bigger than a pin head. Raindrops are only big when they are flattened out on the pavement. Someone has observed raindrops on the pavement "of the size of a shilling, or from that to eighteenpence," but when caught on the sleeve of one's coat they are usually surprisingly small. Hailstones, as Reynolds has shown,* are formed by a larger particle of ice falling through a cloud of minute ice crystals, or spheres, Fig. 22, and picking these up in virtue of the melting and regelation con sequent upon the collision, as explained by Dr. James Thomson's well known theory. The hailstone takes the shape of a cone with a convex base, Fig. 23. The conical surface is ribbed, since wher-

* Reynolds on "The Formation of Raindrops, Hailstones, and Snowflakes."—Glasgow Science Lectures, 1878.

ever there is a protuberance formed it collects particles and thus is

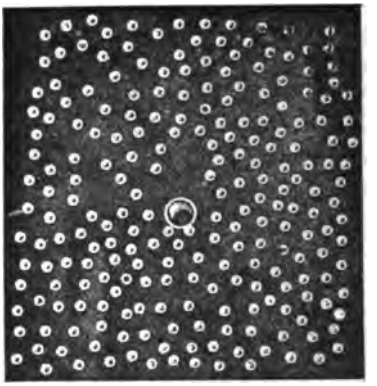

Fig. 21.

continued onwards as the hailstone grows by additions at its base,

Fig. 22.

Fig. 24. This form can usually be readily observed if hailstones

are caught on some soft substance as they fall. The larger the stone becomes the swifter it will fall, as we have seen, and

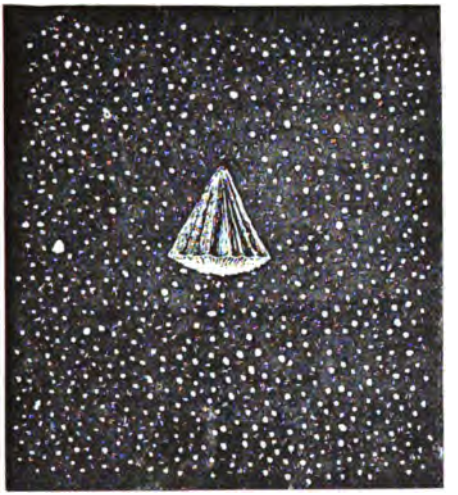

Fig. 23.

consequently the more compact its structure becomes—like a snowball more firmly squeezed. The conical point first formed

Fig. 24.

is, therefore, the least consolidated portion, and it is very liable to be broken off. Hence most hailstones look nearly round on casual observation.

Now, imagine two similar soaring birds with outstretched wings. The wings of the larger one will have, on their under side, a pressure greater than that on the wings of the smaller one, in proportion to the dimensions. The larger bird will therefore require stronger and heavier wings in proportion to its size, since similar wings would only be suitable to bear the same pressure per square inch. Compare the wings of an eagle and those of a bee as regards thickness in proportion to other dimensions.

Again, similar heavy bodies falling at the *same* speed represent powers proportional to the cubes of their dimensions. But the larger bird tends to fall quicker. It will be seen then that similar birds would require to exert powers (horse powers) in greater ratio than that of the cubes of their linear dimensions in order to maintain themselves at a constant height in the atmosphere. But similar muscles would only be capable of exerting powers as the cubes of the linear dimensions, assuming the same rate of expenditure per cubic inch of muscle. Flight is therefore more difficult (other things being equal) for a large bird than for a small one; and it will be observed that nature never made a flying creature of other than small dimensions compared with those of the largest land and marine animals. Large birds, such as the ostrich or the moa, are never able to fly.

Powers and Weights of Similar Engines.—We have seen that similar cylinders, pistons, etc.—in fact, similar engines—are alike suitable to bear the same statical steam pressure. But the areas of the pistons are as the squares of the dimensions. Hence the powers for the *same* piston speed are as the squares of the dimensions. The powers would be as the cubes of the dimensions for the *same* number of revolutions per minute. The stress in a fly-wheel rim, due to centrifugal action, is proportional to the square of the velocity of the rim whatever be the diameter of the wheel. Hence the stresses in similar fly-wheels are of like intensities when the wheels revolve at numbers of revolutions per minute *inversely* as their diameters. A like rule will be seen to apply to all inertia stresses in similar mechanisms. Thus, in

two similar engines the cross sectional areas of the piston rods are as the squares of the dimensions, while the weights of the pistons, etc., are as the cubes. To produce like severity of stress due to inertia, therefore, the accelerations of the masses must be inversely as the dimensions. Now, suppose the engines to run at numbers of revolutions *inversely* as the dimensions—*i.e.*, at the same piston speed. Then the maximum speeds of the pistons will be the same, but the times taken to get up the speed will be in the ratio of the dimensions. The accelerations will, therefore, be inversely as the dimensions, and then, as we have seen, the severity of the inertia stresses will be the same in both engines. This result, coupled with what we have seen above regarding the steam pressures, leads to the important result that, *mechanically*, Similar engines (neglecting the small statical effects of their weights) are alike suitable to work at the same steam pressure and at the same piston speed—that is, at numbers of revolutions per minute inversely as their dimensions. The powers will then be as the *squares*, whereas the weights will be as the *cubes* of the linear dimensions.

In other words the maximum powers of similar engines per ton of weight will vary inversely as the linear dimensions, or inversely as the square roots of the powers. We have, therefore, the important result that we can get a greater horse-power from 100 tons of metal by making it into a number of small steam engines than into one large one. I do not know whether the bearing of this upon the use of twin or triple screws is usually realised, but it is well known that the maximum power per ton of small engines is greater than that of large ones for the same steam pressure and the same piston speed.

In a paper just read before the Institution of Civil Engineers,* Sir John Durston and Mr H. J. Oram gave some most interesting details regarding the performances of engines in different types

*Minutes of Proceedings of the Institution of Civil Engineers, Volume CXXXVII., 7th March, 1899.

of war vessels. The results are not strictly comparable, since the engines of the large and small vessels are not of the same design, and the steam pressures and piston speeds are somewhat different; still a rough comparison or contrast may be made. The four-cylinder triple-expansions engines of the first-class cruiser *Powerful*, working at a steam pressure of 207 lbs. per square inch, and a piston speed of 905 feet per minute, developed 25,900 horse-power. This works out to be 11·58 horse-power per ton of machinery. The four-cylinder triple-expansion engines of the torpedo-boat destroyer *Angler*, working at a steam pressure of 210 lbs. per square inch, and a piston speed of 1,187·4 feet per minute, developed 5,971·5 horse-power, which works out at abont 45·9 horse-power per ton of machinery. These small engines, if working against a resistance that would bring them to the same piston speed as the engines of the great cruiser would develop about 4,600 horse-power,—assuming the distribution of steam to remain the same,—or, say, 35·4 horse-power per ton. Comparing the two engines on this basis, we have the ratio of the horse-powers per ton as 1 to 3·05, and the inverse ratio of the square roots of the horse-powers as 1 to 2·37. The agreement is as close as we could expect, considering what may be included in calculations which are based on the weight of the "machinery complete," and that the engines are not quite similar in proportions. It will be observed that the power per ton developed by the smaller engines is even greater in comparison with the power of the larger ones than our formula would lead us to expect. This may be partly due to a less economical distribution of the steam, and partly to a smaller margin of safety in the smaller engines, and partly to the fact that the smaller engines are designed for a higher piston speed, which would mean that they will be of lighter construction and of superior materials.

We see also that the same rule would apply to similar boilers, though of course large and small boilers are not usually made even approximately similar in design. The grate area and heating surface would increase as the square of the linear dimensions,

whereas, the weight of boiler and of the contained water would increase as the cube. The bearing of this upon the question of having a large number of small boilers in a ship instead of a small number of large ones, is very important.

Now apply these results, and those above deduced with respect to bodies falling in air, to the flying machine problem. It follows from what was said above, that the weights of the æroplanes or other supporting parts of flying machines would require to increase more rapidly than the cubes of the linear dimensions (assuming that the smaller has the thinnest planes, etc., that will do), and that the power required to support even similar machines in the air would increase in larger ratio than the cubes of the dimensions. But the maximum powers of similar boilers and engines would only be as the squares of the dimensions. Hence we see that, as with nature, it is easy to make a small flying machine, but exceedingly difficult to make a large one. When we hear that someone has made a successful flying machine, we should enquire into its scale. Success with a model by no means indicates a similar success with a full sized apparatus. Mr Maxim seems to be the only one who has sufficiently realised this aspect of the problem, and has demonstrated experimentally how a flying machine of what we may call full size may be constructed.

Discussion.

The discussion of this paper took place on 25th April, 1899.

Professor W. H. WATKINSON (Member) considered this one of the most valuable papers that had been read before the Institution It was full of suggestions, and every time one referred to it he would be sure to find some idea which would be of use to him in connection with his every day work. He felt that they were greatly indebted to Professor Barr for bringing it before the Institution.

Mr ROBERT T. NAPIER (Member) observed that without in any way

Mr Robert T. Napier.

questioning the truths laid down by Professor Barr in his able paper, he would draw attention to the narrowness of the limits within which the conclusions arrived at applied in the matter of the relation of the weight of marine engines to the power indicated. In comparing one engine with another it was essential to do this, taking, speeds that could be maintained *continuously*, and the practical limits to such speeds lay not in the piston's traversing so many feet in a given time, but in so many *reversals of motion* taking place in such time, *i.e.*, in so many revolutions. The engines of Atlantic racers ran from 70 to 80 revolutions per minute, and those of tramp steamers—indicating not a tenth of the power—ran but little faster; and this, taken along with the limits to thickness in the castings, referred to by the author, practically disposed of any important reduction in weight per I.H.P. that might otherwise be looked for in the case of small engines. The comparison between the engines of the *Powerful* and those of the torpedo-boat *Angler* really were not between similar engines, as, apart from the heavy item of auxiliary machinery—largely absent from the smaller vessel—her engines were necessarily designed on the basis that lightness must take precedence of durability. Even were the comparison admitted, the apparent reduction in weight per I.H.P. would be found mainly due to the abnormal number of revolutions run. Taking Sir John Durston's figures as quoted, were the smaller engines run at the same number of revolutions as the larger engines—the mean pressures assumed unaltered—the I.H.P. per ton weight of machinery would be reduced to about 13.

Mr J. H. MACALPINE (Member) said perhaps the principal lesson which the paper taught was that, very much could be done in designing without using the comparatively complex formulæ which were required if calculations were made from physical constants, and that was a very useful lesson, especially to young designers. There was one point in the paper of which he wished to speak particularly. In reading the reference to Prof. Osborne Reynolds' theory of the formation of hailstones, he was reminded of a correspondence which he had with Prof. Reynolds on that subject

in 1884. He had the good fortune to make observations of some very curious hailstones which went to confirm the theory, and he had debated with himself whether he would bring forward that correspondence at this time. But as the theory involved a principle which was very important in Nature, any confirmation of it was, perhaps, not altogether out of place. He also mentioned the correspondence because Prof. Reynolds considered that the observation was one worthy of publication. He thought that Professor Reynolds intended to publish it, and evidently Prof. Reynolds understood that he was going to do so; so that the observation referred to had not been made public before. He would—in order

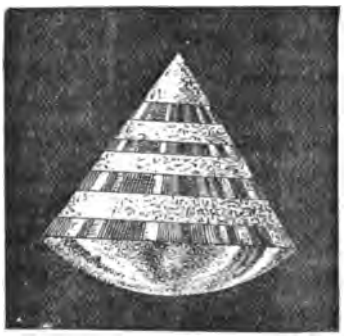

Fig. 25.

to be intelligible in what followed—briefly recapitulate the outline of Prof. Reynolds' theory:—To produce hailstones there must be an atmosphere charged with particles of ice, some of which would be larger and some smaller than others. The larger particles would fall more quickly, as they would experience a proportionately smaller resistance from the air. They would overtake the smaller particles and unite by regelation with them. Thus a hailstone conical in shape, with a somewhat convex base, gradually grew; the accretions being made to the base, which was directed downward. The hailstones he observed fell on an afternoon during which there had been a thunderstorm, and a complex state of the

atmosphere existed; that was to say, the atmosphere, as he would show, was evidently made up of strata of air at different temperatures alternately above and below, or at the freezing temperature. The consequence was that the hailstones were stratified, being composed of alternate layers of white snowy ice and perfectly clear ice. The strata were all parallel to the base, Fig. 25. The proportions of the hailstone, Fig. 25, had been copied exactly from an illustration given in Prof. Reynolds' lecture. But, had he drawn the outline from memory, he would have shown the base with a much less, though clearly marked, convexity.

The correspondence referred to is subjoined herewith:—

Correspondence.

Glasgow, July 12th, 1884.

Dear Sir,

Having become acquainted with your theory of the usual formation of hailstones, through your lecture delivered in Glasgow on that subject some years ago, I venture to send you a description of some very remarkable stones which fell in Glasgow on Friday, July 11th. During the day there was a considerable amount of sunshine, and in the afternoon a slight thunderstorm accompanied by very heavy rain. The rain began to fall about a quarter to four, and increased in intensity for about five minutes, when it was coming down in a perfect deluge and almost, though not quite, vertically. Then hail began to fall with it, not large at first but soon reaching a very notable size. The fall ceased about five minutes to four and the sun came out brightly again. During the fall I collected a large number of stones in my umbrella. Almost all showed the conical form very distinctly, having got little damage in being caught. They were made up partly of hard clear ice and partly of the usual ice, white from enclosed air; the two kinds forming sharply defined strata, all parallel to the base of the cone. In all those examined the vertex was composed of white ice, after which came a variable number of strata, the largest counted (including the vertex) being eight. Of course there were some composed entirely of white, but I think none

entirely of clear ice. The strata varied in thickness in the most arbitrary manner from being so fine that they had to be looked at closely in order to be seen, but almost always those fine strata occurred about the centre of the height of the cone. As near as could be judged by the eye, the divisions between the strata were accurately planes, not concave with respect to the vertex; but, as you will see at once, it was difficult to judge of this, looking at an angle through the curved surface of the cone. Perhaps, if the opportunity occurred again, this could be better observed by carefully cleaving the stone. The base always presented the usual rounded form. The largest stone caught measured exactly three-eighths of an inch across the base, and all the stones were remarkable for their hardness; the larger ones lasting for a considerable time in the hand. I do not remember whether in your lecture you spoke of hailstones like the above having been noticed before, but I can find none recorded in "Nature" for the last few years; although there are some mentioned as having been made up of clear and white ice. The clear formation of the strata seems to me to be a very strong proof of the correctness of your theory. Probably the almost entire absence of wind accounts for the conical form and the parallelism of the strata being so strongly marked. It is perhaps of importance to add that I can produce independent testimony to all I have said above.

I remain, yours very truly,

(Sgd.) JOHN H. MACALPINE.

Professor Osborne Reynolds.

Otley Rectory, Ipswich, 28th July, 1884.

Dear Sir,

I thank you for your letter which has reached me here and is very interesting. I think nothing of the kind has been recorded before, although it has been difficult to avoid something of the same sort in making artificial stones; but then the layers are not regular. I think it would be well to publish your record so as to preserve it. The account in your letter is perfectly clear. You speak of clear ice; now it seems improbable that any ice in such close contact

Prof. Osborne Reynolds.

with the snowy surface of the ordinary stone could be quite clear or free from air, at any rate it would be interesting to know whether these layers of ice were only relatively clear or were free from all air. Of course this would be a very difficult matter to observe.

I remain yours very truly,

(Sgd.) OSBORNE REYNOLDS.

J. H. Macalpine, Esq

Glasgow, 6th August, 1884.

Dear Sir,

I received your kind note of 28th July, and am sorry that I have been quite unable to answer it sooner. The clear layers in the hailstones were composed of perfectly transparent ice. If these layers were formed while the stone was passing through air at the freezing temperature it scarcely seems strange that this should be so, or that the divisions of the layers should be sharp, since the air would almost certainly contain unfrozen water as well as ice. Thus the surface of the stone being kept moist the air would be allowed to escape. While, if the strata of air was below the freezing temperature, only the hard particles would be added to the stone. If the difference of the layers is to be accounted for by the difference in temperature of the portions of air which the stone fell through, it seems to point to a very curious state of the atmosphere at the time. Probably the case of most ordinary occurrence would be that in which the stones were composed only of two layers. I am very willing that the account should be published. Perhaps it will be found that the formation is not of very uncommon occurrence if attention is called to it.

I remain, yours very truly,

(Sgd.) JOHN H. MACALPINE.

Professor Osborne Reynolds.

Mr JAMES WADDELL (Member) regretted that he had not had the pleasure of hearing the paper read. On page 329 Professor Barr said "Thus, if we double the height, double the diameter, and double

Mr James Waddell.

the thickness of a column, it will be able to bear four times the former load." He had not read the paper through, so that he might be wrong, but he imagined that Professor Barr did not mean to imply that it was necessary to double the height. He had always understood that by shortening a column it was able to bear a greater load. He had considered the matter for twenty years, and had applied in practice what was implied in the statement quoted, excepting that which referred to the length of column.

Professor BARR, in replying, said he did not think there was very much that he had to say in reply to the discussion. He thanked Professor Watkinson for his kind remarks. With regard to Mr Napier's remarks it was quite true they only got the greater power per ton of weight from the smaller engines by running them at a greater number of revolutions; but, he thought he had made it clear that in regard to stresses due to *inertia* it was not the number of revolutions per minute that they had to consider, but the piston speeds. Running the engines at the same piston speed they would get a greater power per ton from the smaller engine. He thought that was brought out in the paper and in the illustration he had given from the Admiralty practice. He could not agree with the statement Mr Napier made, which he understood to mean that the limit of speed was expressible in number of revolutions per minute irrespective of the dimensions of the engines. He had no doubt that Sir John Durston would be delighted if he could run the engines of the "*Powerful*" at the same number of revolutions per minute as he adopted for those of the "*Angler*." He was quite aware that the results of practical working in engines were not strictly comparable, because no one built a large and a small engine of exactly the same proportions. Neither were cast iron pipes made 1 inch in diameter and $\frac{1}{12}$-inch thick as he had assumed. That was only given as an illustration. He thought it was interesting, however, to see that the experience in the navy of the maximum powers that had been got came out so very nearly in the same ratio as was obtained by the reasoning he had given in the paper. With regard to the question of columns, which had been referred to by Mr

Prof. A. Barr.
Waddell, it was quite the case that a short column would stand a greater load than a long one. If they doubled the transverse dimension without doubling the length, the column would be able to bear more than four times the load. Hodgkinson, in founding empirical formulæ upon his experiments on the strength of columns, gave expressions which were, for some cases, very nearly in accordance with the principle of similar structures, and for some cases exactly in accordance therewith. He was much interested in Mr Macalpine's remarks upon hailstones. It was a digression in the paper, but he ventured to think that it would be of some interest to members. He was rather struck with the phenomenon which Mr Macalpine had referred to, that the layers in the stratified stones did not have the rounded form of the base. That had rather puzzled him at that moment, but he thought he saw a possible reason for it. The rounding of the base was due no doubt to the form of the stream lines below the base, and it was evident that the action would not be the same in an exceedingly rare atmosphere as it was in the lower and denser regions of the atmosphere. If a vacuum surrounded the particles he had no doubt the base would be flat. That might account for the portion of the hailstone formed in the upper regions of the atmosphere having less rounding of the base than there was in the part formed of the more dense layers below.

Mr MACALPINE—That was a matter very difficult to make sure of. With a hailstone in his hand he could not make sure of the point, but it seemed to be the case.

Prof. BARR—He was afraid that he could not be very sure of the theory. He merely put it forward as a possible explanation of the phenomenon if it did appear. As to the different character of the strata, that was exceedingly interesting, and it went a long way to prove the truth of Professor Reynold's theory, which, however, required no further proof. Professor Reynolds had very successfully made artificial hailstones by blowing ice particles on the end of a match, suspended over the nozzle from which the stream was projected. As to the cause of the differences in the material of the strata, it was certainly difficult to account for an atmosphere so com-

plex in its structure as to account for alternations of clear and white strata, but he would ask Mr Macalpine to consider whether since the freezing of the atmosphere had been due to electrical discharges and sudden expansions, it was not possible that if in the atmosphere there were layers of denser and less dense cloud, one part of the cloud would be frozen completely, and so form an opaque layer, while another part was only partially frozen, and so produced a transparent layer.

Mr MACALPINE—In the case of a complex atmosphere they knew that they had these stratified layers lying right over one another.

Prof. BARR—If there were strata with more or less moisture in them, he could understand that certain conditions would be able to completely freeze one of these and not another.

Mr MACALPINE — Imagined that the electrical discharges would altogether upset the sudden changes of temperature, and there was one other point—it always seemed to him that the rounding of the base could be accounted for by a slight wavering of the axis of the stone.

Professor BARR—It was shown on the stone produced artificially which did not oscillate.

Mr MACALPINE—Thought that both actions would take place.

Professor BARR had nothing further to say except to thank the gentlemen who had expressed their interest in the paper.

The PRESIDENT said that this was a most interesting paper, and he quite concurred with every word that Professor Watkinson had said. He had gone back to the paper read by Professor James Thomson, and he found that the discussion on that paper had been very interesting. He proposed a very hearty vote of thanks to Professor Barr for his paper.

The vote of thanks was heartily accorded.

Mr JAMES GILCHRIST (Vice-President) said that before separating a very pleasant duty devolved upon him. That night a new President had been elected, and consequently it fell to Mr Russell to vacate the chair. They were all aware that Mr Russell for a

Mr James Gilchrist.

very long time had served the Institution in various capacities, and there was no member on the roll who had recorded a better attendance than Mr Russell during the last 35 or 40 years. They had seen for themselves how well he had conducted the business of the Institution during the last two years in which he had occupied the presidential chair, and the least thing they could do was to render to him their very heartiest thanks for the trouble and care he had taken in the interests of the Institution generally.

The PRESIDENT thanked the members very heartily for the kind way in which they had received the too flattering words that had been given utterance to. No one knew better than himself how imperfectly he had fulfilled the duties, but he had had great assistance from every member of the Council, and from none more so than the newly elected President, Mr Caird, who had been a very constant attender at the Council meetings since he took office, and he was sure that the Institution would go on prospering under Mr Caird's able guidance.

THE "JAMES WATT" ANNIVERSARY DINNER.

THE Annual "James Watt" Dinner was held in the Windsor Hotel, St. Vincent Street, Glasgow, on Saturday evening, 21st January, 1898. The company numbered upwards of 280 members of the Institution and distinguished guests. Mr George Russell, President, occupied the chair, and the croupiers were Mr Robert Caird, F.R.S.E., and Prof. W. H. Watkinson, Vice-Presidents. Among others present were—The Hon. Lord Provost Sir David Richmond; Sir A. J. Durston, K.C.B., R.N., Engineer-in Chief of the Navy; Sir William Arrol, LL.D., M.P.; the Very Rev. Principal Story, D.D., LL.D.; Professor Archibald Barr, D.Sc.; Col. J. E. Bingham, Sheffield; Colonel Denny, V.D., M.P.; Mr Henry H. West, Liverpool; Mr William Foulis; Captain Usui, Imperial Japanese Navy; Mr James Weir; Mr W. F. Beardshaw, Sheffield; Mr James Mollison; and Mr Thomas Kennedy.

After dinner, the loyal toasts were given from the chair and cordially pledged.

Mr J. R. RICHMOND, in proposing the toast of "The Navy, Army, and Reserve Forces," said the Institution was deeply interested in the evolution of the Navy, and additional evidence had been given during the last few weeks of the confidence which the Naval Authorities had in the shipbuilders on the Clyde. Their interest, however, in the Navy did not spring from those purely sordid and commercial motives, but from a nobler and deeper source—from the pride which every free-born Briton felt in the maintenance and preservation of the empire. They believed that a progressive and forward naval policy was this country's best contribution to the maintenance of peace. In coupling the first part of the toast with the name of Sir John Durston, Mr Richmond remarked that vast strides had been made in the Navy, and to-day they found, notwithstanding the great demands made by the expansion of the fleet,

that these had been met in a manner which was worthy of the highest admiration, and which testified to both the technical and the administrative ability of their distinguished guest. Not so many years ago the mercantile marine was the pioneer in steam engineering, but now that no longer ruled. In matters of higher boiler pressure especially, the ships of the Navy were first, and the mercantile marine was content to follow.

Sir A. J. DURSTON, K.C.B., R.N., replying for the Navy, said many present had spent good years of their lives upon the sea, and knew intimately the conditions and circumstances of that life, and how much the personnel of the Navy depended on the staunchness of its material and its quantity and quality. He would venture to say, in view of the increase in the strength of the Navy concurrently at this time with the large increase in our mercantile marine, and especially of similar increases in other countries, how desirable it was that every one of the members of the Institution—steelmakers, forgemen, shipbuilders, engineers, and boilermakers—should consider and resolve that the needs of our own country should have the first claim upon their energies and abilities. It had been well put that various other questions had arisen which were but as ripples on the surface of a great wave, but this he could say, that the introduction of higher pressures in water-tube boilers had, in our large ships, enabled 50 per cent more power on the same weight and space to be maintained continually at sea than was the case with the former lower pressures. From this district, in which was initiated the work of James Watt, the Scotch boiler, and the compound and triple-compound marine engine, it was no small satisfaction to receive words of praise, but this was much added to by the knowledge that among them there were many who were advocating, by invention and practice, the use of higher steam pressures in water-tube boilers.

Colonel DENNY, M.P., also responded. He remarked that, while we were a military nation, we were probably the least warlike nation in the world. To be a warlike nation very often meant provocation and retaliation; to be a military nation meant to have a proper

Col. Denny.

conception of the function of militarism, and in our case, in both branches of the service, that was defence, not defiance. We placed our confidence entirely in volunteer forces, for neither in our navy nor our army did anything like compulsion exist. Nothing stood between us and conscription but the Volunteer forces, and he appealed for the raw material, out of which they would make men fitted to defend the country when occasion arose.

The CHAIRMAN, proposing "The Memory of James Watt," recalled the fact that at the dinner last year this toast was proposed by Lord Kelvin, their highly esteemed senior honorary member, who made that Watt anniversary one of exceptional importance, for then they had brought vividly in conjunction the beginning and the close of the nineteenth century—these two famous names in science—Watt and Kelvin; the first with his life's active work just completed as the century began, and the other at near its close still maintaining his long and brilliant career, which they all hoped might be prolonged for many years to come. It was sometimes asked—Is it necessary to celebrate the birth of eminent men? At least of men so very eminent as Watt, men whose fame had extended all over the civilised world. Poets and writers whose works had been translated into all languages—their memory was likely to endure while literature existed. Philosophers, whose very names were incorporated with their works and discoveries, were certain to be remembered in all time. But, notwithstanding these considerations, and many more that might be urged, it was undoubtedly to the honour of mankind that great names had generally been held in reverence, and that monuments had been erected to testify to their greatness. When that night they remembered the life and labours of Watt, it was in the spirit of the appropriate words of Lord Brougham, which were inscribed on the statue of Watt in Westminster Abbey—

> "Not to perpetuate a name which must endure while the peaceful arts flourish, but to show that mankind have learnt to honour those who best deserve their gratitude; the King, his ministers, and many of his nobles and commoners of the realm raised this monument to James Watt, who, directing the force of an original genius,

The Chairman.

> early exercised in philosophical research, to the improvement of the steam engine, enlarged the resources of his country, increased the power of man, and rose to an eminent place among the illustrious followers of science, and the real benefactors of the world."

The Chairman after recalling the prominent incidents in Watt's career, remarked that—In St. Paul's Cathedral the closing words of the epitaph on the tomb of its great architect were—"Reader, if you seek his monument look around." So it might be truly said of Watt. Almost every part of the modern steam engine testified of his genius to engineers. Every counting-house had his memorial in the copying press. The steam vessels which sailed on ocean, sea, and river proclaimed to every nation the victory of steam power over wind and wave. The present state of civilisation of the world was largely due to the influence of his inventions, which had extended to the furthest bounds of the earth. His victories they met annually to celebrate in the spirit of the words addressed to Shakespeare by John Milton—

> "Dear son of memory, great heir of fame,
> What need'st thou such weak witness of thy name?
> Thou, in our wonder and astonishment,
> Hast built thyself a live-long monument,
> And so sepulchred in such pomp dost lie,
> That kings for such a tomb would wish to die."

The toast was pledged in silence.

Mr ROBERT CAIRD, Vice-President, in submitting the toast "The University of Glasgow," said he could not rise to propose the toast which had been assigned to him without reverting to the last occasion on which it was proposed at an Annual Dinner of the Institution. It was then responded to by the late Principal of the University of Glasgow, and those of them who were then present would not soon forget the words, playful, inspiring, and instinct with a matchless eloquence, spoken by lips silent now alas! for ever. The wisest and the best passed away from among them; but the Institutions with which their lives were associated remained. Corporations never die. And they might fitly adopt in speaking of the Head of a University the trite formula, so often quoted of a monarchy,

Mr Robert Caird.

le roi est mort, vive le roi. The reply to the toast had been undertaken by the new Principal, and they, the members of the Institution, extended to him a hearty welcome on this his first appearance among them in that capacity. The Institution of Engineers and Shipbuilders in Scotland had always maintained close and intimate relations with the University. There had never been a time, he believed, when the Institution had been without some of the Professorial staff among its members; some of the most important contributions to its Transactions had emanated from the academic precincts; its Council had been strengthened and enlightened almost continuously by a succession of able representatives from the Senate, and its list of Presidents was made glorious by the name of a past Professor of Engineering in the University, Macquorn Rankine. They had, he thought, in one of the earliest public utterances of the new Principal, after assuming the headship of the University, an earnest of his sympathy with their pursuits. The enormous strides made by physical and engineering science during the last half century, had thrown upon the University a very onerous burden for which its resources were manifestly inadequate. It was incumbent upon them of the engineering and shipbuilding professions to assist by every means in their power—by their influence with the legislature, by personal sacrifice, by arousing the interest of munificent benefactors—in securing for their University those facilities for experimental research, those laboratary appliances, in which, to their shame be it spoken, they lagged so lamentably behind their Continental neighbours. He had referred to the active share members of the University staff had taken and were taking in the work of this Institution, and he might be allowed to express the hope that they, as the guardians of the sacred torch of truth, charged to hand it on to future generations with undiminished lustre, might always find, brightly burning on their altar, abundant means of replenishing its flame.

Principal STORY acknowledged the toast—That there should be an intimate and close relation between such an Institution as that and the University was, he said, inevitable if they reflected on those circumstances to which reference had already been made and

Principal Story.
the connection between James Watt and the University of Glasgow. In the days when Adam Smith was teaching the principles of political economy in the University, James Watt, coerced by what his friend Sir William Arrol had called the trades unionism of the time, found himself unable to find any place in which he could pursue his experiments, and was taken under the wing of the University. It was there that he experimented upon the old engine of Newcomen; it was there that he invented the condenser. That little engine of Newcomen, in the museum of the University of Glasgow, was one of their proudest possessions. Reference had been made to the means by which men of the present generation could show their sympathy with, and interest in, the military defences of the country. As Colonel Denny was speaking he felt that he (Principal Story) might say as much for the scientific advancement of our engineering and maritime science, especially on the Clyde. We were far behind the position which we ought to occupy. There was no valley in the world that ought to take a place before the valley of the Clyde in all that related to the advancement of maritime and of engineering science, and yet much as they were doing they were not doing as much as they ought. If anyone visited the precincts where Professor Barr was pursuing his experiments and conducting his work, he would feel how absolutely inadequate was the accommodation which the University was able to afford him. In regard to the extension of their means of research and of experiment—and research and experiment, they would remember, were the very life-blood of all advancement in science—that what they wanted above everything else was not the sentimental sympathy and the intellectual approbation of their friends in Glasgow and elsewhere, but some substantial evidence of their interest in the work which they were trying to overtake. Through the teaching of Adam Smith and the experiments of James Watt the University of Glasgow in those days was in the very forefront of scientific advancement of the time. If they were to prove themselves worthy of their forebears and predecessors in this great work, they must awake to the consciousness of their need

and do what they could to supplement their deficiency. He would ask them to lay to heart and consider whether it was not in the power of Glasgow and of the wealthy and influential men of the valley of the Clyde to enable the University of Glasgow to rise to the exigencies of the time, and to advance, holding the foremost place in engineering science and in scientific development.

Mr H. H. West, Liverpool, proposed, "The City of Glasgow."

Sir David Richmond, the Hon. the Lord Provost, briefly acknowledged the toast.

Colonel J. E. Bingham, Sheffield, proposed "The Institution of Engineers and Shipbuilders in Scotland."

Sir William Arrol, LL.D., M.P., replied—He observed that some years ago the Institution had been resting on its oars. Recently, however, it had taken a new lease of life. Their Institution should be second to none of its kind in the world. If anybody was able to place an institution in that position it was the Clyde engineers and shipbuilders. In concluding, he mentioned that some time ago a professor in Germany wrote a paper on the life of James Watt, in which he proved that Watt was really the inventor of the decimal system. He (Sir William) had had some correspondence on the subject, and he had arranged that the correspondence which had already appeared in one of the Sheffield papers should be placed on record in the Transactions of the Institution, so that members might have an opportunity of referring to it.

The correspondence referred to is subjoined herewith:—

THE INVENTOR OF THE DECIMAL SYSTEM OF WEIGHTS AND MEASURES.

Sir,—Some time ago my attention was called to a lecture given by Professor A. Ernst, of the Technical High School, in Stuttgart, on the occasion of the 37th annual meeting of the German Engineers.

The subject of the lecture was "James Watt and the Foundation of our Modern Steam Engineering" (an historical study).

This interesting work of the learned professor bears evidence of the thorough and painstaking manner in which the subject had been studied. The lecturer, to prove his statements, adduced extracts from publications long forgotten, and no longer obtainable in this country, at least my endeavours to procure them have been fruitless. The titles of these publications are "Origin and Progress of the Mechanical Inventions of James

Watt," by James Patrick Muirhead, M.A., vol. II., 1854. They were republished in 1856, but the latter addition does not contain like the former the particular letters bearing upon this subject.

Perhaps the most interesting part of the paper is that which gives to James Watt the credit of being the inventor of the decimal system of weights and measures, the introduction of which into this country is at present under consideration, so that this subject appears to me of special importance. I therefore think it may be well to submit a translation of this latter portion of Professor Ernst's lecture: "Of particular interest is the fact, which appears to have been completely forgotten, that Watt made the first move in the direction of the introduction of our present uniform decimal system of measures and weights. In his varied scientific work he found it very troublesome to convert the figures given by foreign men of science in the results of their researches used by him for purposes of comparison, and this led him naturally to form a plan of introducing an international system in order to simplify tedious mechanical labour at least for scientific purposes, and at the same time to build up the new system for the easiest possible application generally.

"His first letter to Kirwan, of November, 1783, on this matter most clearly develops the idea to start from an unit of length, to adopt as unit of weight the cubic unit filled with water, and to divide these by scale from 1 to 10,000, to weigh instead of measure all liquids, and to apply the weights of gases to the cubic unit of water in order to be able to express by the same figure specific and absolute weights. (See Watt to Kirwan, 14th November, 1783, Muirhead II. p. 179.)

"As unit of length he proposes (as Huyghens had already done in 1673) the seconds-pendulum—the time foot—or a definite reference to this size. There we have the system of weights and measures as it was adopted by legislation in 1790 by the French National Assembly of Paris, and which on confirmation of the French Academy of Science was finally introduced in the year 1800, with only one alteration that instead of the length of the seconds-pendulum, which is dependent upon the geographical position, the metre was substituted as unit of length in order to have a standard that is supplied by and can be reproduced directly in nature.

"From correspondence at that time the way can be clearly traced by which these proposals got to France; as early as November 23rd, 1783, Watt informed Mr De Luc, a Frenchman then living in England, that Priestley had assented to his proposals, and that he—De Luc—would oblige him—Watt—greatly by conferring with La Place about this matter in order to arrive as near as possible at unanimity. (See Watt to De Luc, 23rd November, 1783, Muirhead II., p. 182.)

"A few years later, in 1786, Watt was called to Paris in consultation with Boulton respecting the Waterworks in Marly, and during his sojourn there he had an opportunity of getting in touch personally with French savants of that time, and subsequent letters prove that he was also in communication with Monge, who, like La Place, was a member of the Commission appointed by the Academy of Science to report upon the new system of weights and measures.

"Whilst conservative England declined to introduce the innovation generally, France extended the introduction of the new system of weights and measures with the decimal division to all her branches of trade and commerce."

After perusal of the above, the fact—clearly established by the letters, of which authentic copies are appended—cannot be doubted that James Watt was the prime mover and advocate of the decimal system, which so far as I know the French claim as the production of their own genius.

As this erroneous impression prevails generally I think the world at

large should know that the French are no more entitled to this honour than they can claim to be the inventors of the steam engine. James Watt clearly conceived what was needed; the French were smart enough to be the first to appropriate it, but it is due to the memory of James Watt to let all the world know that to him belongs the credit of having originated and first suggested the system which has since been adopted by nearly all commercial and industrial nations.

Yours truly,

JOSEPH JONAS.

Continental Steel Works,
Sheffield.

The full text of the letters is as follows:—

Mr Watt to Mr Kirwan.

Page 179.
No. 250.

Birmingham, Nov. 14th, 1783.

Dear Sir.—Your obliging communication of Mr Scheele's process of making the Prussian acid gave me great pleasure, and according to your desire I communicated it to our Lunar Society last Monday, who desire me to return you their thanks.

Having lately been making some calculations from Messrs Lavoisier and De La Place's experiments and comparing them with yours, I had a great deal of trouble in reducing the weights and measures to speak the same language, and many of the German experiments become still more difficult from their using different weights and different divisions of them in different parts of that Empire.

It is therefore a very desirable thing to have these difficulties removed, and to get all philosophers to use pounds divided in the same manner, and I flatter myself that may be accomplished if you, Dr. Priestley, and a few of the French experimenters will agree to it, for the utility is so evident that every thinking person must immediately be convinced of it. My proposal is briefly this: let the philosophical pound consist of 10 oz. or 10,000 grains, the ounce consist of 10 drachms or 1000 grains, the drachm consist of 100 grains (or 100 grains).

Let all elastic fluids be measured by the ounce measure of water, by which the valuation of different cubic inches will be avoided, and the common decimal tables of specific gravities will immediately give the weights of those elastic fluids.

If all philosophers cannot agree on one pound or one grain let every one take his own pound or his own grain, it will affect nothing except doses of medicines which must be corrected, as is now done; but as it would be much better that the identical pound was used by all, I would propose that the Amsterdam or Paris pound be assumed as the standard, being now the most universal in Europe; it is to our avoirdupois pound as 109 is to 100. Our avoirdupois pound contains 7000 of our grains, and the Paris pound 7630 of our grains, but it contains 9376 Paris grains, so that the division into 10,000 would very little affect the Paris grain. I prefer dividing the pound afresh to beginning with the Paris grain, because I believe the pound is very general, but the grain local.

Dr. Priestley has agreed to this proposal, and has referred it to you to fix upon the pound if you otherwise approve of it. I shall be happy to have your opinion of it as soon as convenient, and to concert with you the means of making it universal.

I remain with much esteem, dear sir,

Your obliged friend,

JAMES WATT.

I have some hopes that the foot may be fixed by the pendulum and a measure of water, and a pound derived from that; but in the interim let us at least assume a proper division, which from the nature of it must be intelligible as long as decimal arithmetic is used.

Mr Watt to Mr De Luc.

Page 182.
No. 251. Birmingham, Nov. 23rd, 1783.

* * —In making calculations from Messrs Lavoisier and De La Place's memoir I have been much plagued reducing French grains to English ones, to compare them with some experiments of Mr Kirwan's, and, indeed, to compare one experiment with another, even where the weights used are the same gives much trouble from the absurd subdivisions used by all Europe, and also to compare cubic inches of various substances with weights is a perpetual source of unnecessary calculation; in order to avoid which I proposed to Dr Priestley and Mr Kirwan to agree on a perpetual decimal subdivision of the pound thus:—

100	grains	1 drachm.
1000	grains	1 ounce.
10,000	grains	1 pound.

All elastic fluids to be measured by the ounce or pound measure.

The decimal tables of specific gravities will give the weights without calculations. All liquids to be weighed. Thus every philosopher may use the grain or pound he has most affection for, and yet if he adopts this method of subdivision the results will be comparable by persons knowing nothing about his individual grain or pound. Mr Kirwan answers that Mr Whitehurst is at work on a philosophical measure from which he means to deduce a pound divided as above, but I say, that as it may be long before that comes forth let the expedient of the proper division take place in the meantime. Dr Priestley will immediately adopt it, and I will be obliged to you to write to Mr De La Place on the subject. In order to introduce uniformity as much as we can, we mean to subdivide the Paris pound into 10,000 parts. * *

Mr Watt to Mr Kirwan.

Page 183.
No. 252. Birmingham, Nov. 26th, 1783.

I am glad to hear that Mr Whitehurst is so far advanced with the universal measure, but as it may be some time before he brings it forth, and I want a new set of weights, and am not willing to make bad ones, I should therefore be glad to know the outlines of his plan. If he uses a seconds-pendulum and divides it into 3 feet, that cubic foot of water will weigh about 80½lbs. avoirdupois, which may very properly be redivided into 80 lbs., and would thereby occasion very little confusion in the article of weights. I think it would make too small a pound to divide it into 100lbs., without some other length of pendulum be pitched upon, but it will require much consideration to adapt it properly to all the different things such a standard is applicable to. I shall therefore speculate no more upon it until I hear Mr Whitehurst's proposal.

Mr Watt to Mr Magellan.

Page 184.
No. 253. Birmingham, Dec. 1st, 1783.

* * —Dr. Withering has shown me your paper on weights, which in general coincides with my own sentiments on that subject, on which I wish

something was done, as we are at present in a most confused state in those matters, and subject to perpetual errors.

Mr Watt to Mr Magellan.

Page 184.
No. 254. Birmingham, Jan. 1st, 1784.

* * —As to the philosophical weight and measure, I have thought very little about it. The principal thing seems to be dividing the pound, etc., decimally and weighing liquids instead of measuring them, and measuring elastic fluids by the ounce or pound measure of water. As to the precise foot or pound, I do not look upon it to be very material, in chemistry at least. Either the common English foot may be adopted according to your proposal, which has the advantage that a cubic foot is exactly 1000 ounces, consequently the present foot and ounce would be retained; or a pendulum which vibrates 100 times a minute may be adopted for the standard, which would make the foot 14·2 of our present inches, and the cubic foot would be very exactly a bushel, and would weigh 101 of the present pounds, so that the present pound would not be much altered. But I think that by this scheme the foot would be too large, and the inconvenience of changing all the foot measures and things depending on them would be much greater than changing all the pounds, bushels, gallons, etc. I therefore give the preference to those plans which retain the foot and the ounce.

MINUTES OF PROCEEDINGS.

FORTY-SECOND SESSION.

A SUMMER MEETING OF THE INSTITUTION was held in the Cutlers' Hall, Sheffield, on Wednesday, 15th June, 1898, at 9-45 A.M.

The President, Council, and Members of the Institution were received at the Cutlers' Hall by the Lord Mayor of Sheffield (Alderman George Franklin), the Master Cutler (Sir Alexander Wilson, Bart.), and other members of the Local Reception Committee.

Mr GEORGE RUSSELL, President, thereafter took the Chair.

The Minutes of the Annual General Meeting, held on April 26th, 1898, were read, confirmed, and signed by the President.

Mr JOHN WARD proposed a vote of thanks to the Lord Mayor of Sheffield, Lady Mayoress, Master Cutler, and the members of the Local Reception Committee, which was seconded by Mr JAMES MOLLISON, and carried with acclamation,

A paper on "The Problem of Combustion in Water-Tube Boilers, and a means of its Solution," by Mr JAMES WEIR, was read.

A paper on "The Transmission of Heat through Plates from Hot Gases to Water," by Mr GEORGE HALLIDAY, Wh.Sc., was read.

The discussions on these papers were begun and adjourned.

Prof. JOHN OLIVER ARNOLD, of the University College, Sheffield, delivered a lecture on "The Internal Architecture of Metals."

The discussion on Prof. Arnold's remarks took place, and was terminated.

On the motion of the PRESIDENT, Prof. Arnold was awarded a vote of thanks for his lecture.

The following candidates were elected :—

AS MEMBERS :—

BEGBIE, WILLIAM, Engineer, c/o Riddell, 55 Garnethill Street, Glasgow.

COULSON, W. ARTHUR, Electrical Engineer, 47 King Street, Mile-end, Glasgow.

DICKSON, WILLIAM, Managing Director, Lanarkshire Steel Company, Motherwell.

DUNCAN, HUGH, Engineer, London Road Iron Works, Glasgow.

HAMILTON, CLAUD, Electrical Engineer, 247 St. Vincent Street, Glasgow.

MACFARLANE, JAMES, Manager, Steel Works, Annieslea, Motherwell.

PUTNAM, THOMAS, Engineer Founder, Darlington Forge Co., Darlington.

RITCHIE, GEORGE, Manager, Steel Works, Parkhead Forge, Glasgow.

SCOTT, CHARLES WOOD, Shipbuilder, Dunarbuck, Bowling.

SCOTT, JAMES, Jun., Shipbuilder, Strathclyde, Bowling.

SHANKS, WILLIAM, Iron and Brass Founder and Sanitary Engineer, Tubal Works, Barrhead.

WARDE, HENRY W., Electrical Engineer, 71 Waterloo Street, Glasgow.

AS MEMBERS FROM GRADUATES' SECTION :—

BAXTER, P. M'L., Engineer, Copland Works, Govan.

GRAHAM, WALTER, Mechanical Engineer, Kilblain Engine Works, Greenock.

RUDD, J. A., Mechanical Engineer, 30 Hope Street, Glasgow.

TATHAM, STANLEY, Naval Architect, Montana, Burton Road, Branksome Park, Bournemouth, W.

AS ASSOCIATES :—

DIXON, WILLIAM H., Electrical Engineer, 164 St. Vincent Street, Glasgow.

RIDDLE, JOHN C., Manager, 8 Gordon Street, Glasgow.

ROBERTS, WILLIAM IBBOTSON, Representative Globe Steel Works, Sheffield, 6 Ancaster Drive, Glasgow.

AS GRADUATES:—

RODGER, ANDERSON, Jun., Draughtsman, Glenpark, Port-Glasgow.

STEVEN, DAVID M., Apprentice Engineer, 18 Sandyford Place, Glasgow.

THE FIRST GENERAL MEETING was held in the Hall of the Institution, 207 Bath Street, on Tuesday, 25th October, 1898, at 8 P.M.

Mr GEORGE RUSSELL, President, occupied the chair.

The Minutes of the Summer Meeting held, at Sheffield, on Wednesday, 15th June, 1898, were read, confirmed, and signed by the President.

The Annual Report of the Council and Treasurer's Statement was submitted and approved.

The PRESIDENT delivered his Inaugural Address.

On the motion of Sir WILLIAM ARROL, LL.D., M.P., the President was awarded a vote of thanks for his address.

The Premiums awarded at the Annual General Meeting of April 26th, 1898, were presented as follows, viz. :—A Premium of Books to Mr ALEXANDER MORTON, for his paper on "The Maximum Elasticity and Density of Steam"; and a Premium of Books to Mr NISBET SINCLAIR, for his paper on "Notes on the Estimation of the Power of Steamships at Sea, and of Feed- and Circulating -Water at Sea."

The discussion on Mr JAMES WEIR'S paper "The Problem of Combustion in Water-Tube Boilers, and a Means of its Solution," was resumed and concluded.

On the motion of the PRESIDENT, Mr Weir was awarded a vote of thanks for his paper.

The PRESIDENT announced that the following candidates had been elected, viz. :—

AS MEMBERS :—

ARCHIBALD, HENRY, Steel Founder, The Parkhead Steel Foundry Co., Glasgow.

PURVIS, J. A., B.Sc., F.R.S.E., Civil Engineer, 53 York Place, Edinburgh.

STEWART, JAMES, Mechanical Engineer, Works Manager, L. Sterne & Co., 155 North Woodside Road, Glasgow.

AS MEMBER FROM ASSOCIATES' SECTION :—

DIXON, WILLIAM H., Electrical Engineer, 164 St. Vincent Street, Glasgow.

AS GRADUATE :—

ROSS, J. R., Draughtsman, 64 Sandyford Street, Glasgow.

THE SECOND GENERAL MEETING was held in the Hall of the Institution, 207 Bath Street, on Tuesday, 22nd November, 1898, at 8 P.M.

Mr GEORGE RUSSELL, President, occupied the chair.

The Minutes of the General Meeting held on 25th October, 1898, were read, confirmed, and signed by the President.

The discussion on Mr GEORGE HALLIDAY'S paper on "The

Transmission of Heat through Plates from Hot Gases to Water,' was resumed and concluded.

On the motion of the PRESIDENT, Mr Halliday was awarded a vote of thanks for his paper.

The following papers were read:—

On "Feed-Water Filters," by Mr A. E. SHUTE; and

On "Meters and Systems of Charging for Electric Energy," by Mr WILLIAM ARNOT.

The PRESIDENT announced that the following candidates had been elected, viz.:—

AS MEMBERS:—

ANDREWS, JAMES, Engineer, Holm Foundry, Cathcart.
BEARDMORE, JOSEPH GEORGE, Engineer, Parkhead Forge, Glasgow.
BRAY, E. N., Electrical Engineer, 81 St. George's Road, Glasgow.
CHRISTIE, JOHN, Electrical Engineer, 75 Waterloo Street, Glasgow.
CLARK, GEORGE ALEXANDER, Electrical Engineer, 182 West George Street, Glasgow.
FERGUSON, WILFRED H., Chief Draughtsman, 4 Thornwood Ter., Partick.
GORRIE, JAMES M., Engineer Draughtsman, 9 Park Drive, Whiteinch.
LACKIE, WILLIAM W., Electrical Engineer, 75 Waterloo Street, Glasgow.
LAIRD, ANDREW, Civil and Mining Engineer, 121 West Regent St., Glasgow.
LE ROSSIGNOL, A. E., Electrical Engineer, 88 Renfield Street, Glasgow.
LONGBOTTOM, JOHN GORDON, Lecturer on Engineering, Technical College, 38 Bath Street, Glasgow.
MCAULAY, W., Electrical Engineer, 182 West George Street, Glasgow.
MCLAREN, JOHN ALEX., Electrical Engineer, 182 West George St., Glasgow,
OLDFIELD, GEORGE, Engineer, Manager, Atlas Works, Springburn.
PATTERSON, JAMES, Ironfounder, Maryhill Iron Works, Glasgow.
SLOAN, J. LUMSDEN, Consulting Engineer, 112 Bath Street, Glasgow.
STRACHAN, ROBERT, Engineer Draughtsman, 5 Osborne Place, Govan.
WARD, J. C. A., Electrical Engineer, 75 Waterloo Street, Glasgow.
WILKS, HARRY, Consulting Engineer, 112 Bath Street, Glasgow.
YOUNG, WILLIAM L., Brassfounder, 33/35 Stanley Street, Kinning Park, Glasgow.

AS MEMBERS FROM GRADUATES' SECTION:—

SHARP, JOHN, Engineer, 11 Windsor Terrace, Glasgow.
WEIR, WILLIAM, Engineer, Holm Foundry, Cathcart.

AS GRADUATES:—

ALISON, ALEXANDER E., Engineer, 2 Springbank Road, Paisley.

CRAIG, JAMES C. M., App. Mechanical Engineer, 3 Park Grove Terrace, Paisley Road, West, Glasgow.

CRAWFORD, JAMES M., Engineer, 7 Holborn Ter., Kelvinside, N., Glasgow.

CUNNINGHAM, P. NISBET, Jun., Apprentice Engineer, Easter Kennyhall House, Cumbernauld Road, Glasgow.

DAVIDSON, WM. J. J., App. Engineer, Castlehill, Renfrew.

DONALDSON, GEORGE, Engineer Draughtsman, 44 Gardner St., Partick.

DUNCAN, JAMES GRIEVE, Engineer Draughtsman, 137 Shields Rd., Glasgow.

GILMOUR, ALEXANDER, Draughtsman, Barrhead.

GRAHAM, GEORGE, App. Engineer, 3 Park Terrace, Govan.

HENDERSON, HARRY ESDON, Engineer, 129 Paisley Rd. W., Glasgow.

HOLLAND, HENRY NORMAN, Draughtsman, c/o Bowman, 366 New City Road, Glasgow.

HOUSTON, PERCIVAL T., Mechanical Engineer, 22 Lancaster Gate, London.

MILLER, ALEXANDER, Draughtsman, 2 Ailsa Terrace Hillhead, Glasgow.

MILLER, JAMES, Assistant Foundry Manager, 20 Iona Place, Mt. Florida, Glasgow.

MUIR, ANDREW A., Mechanical Engineer, 23 Randolph Gardens, Partick.

NIVEN, JOHN, Engineer, 36 Princes Square, Strathbungo, Glasgow.

RANKEN, FRANCIS, App. Mechanical Engineer, 2 Minard Terrace, Partickhill, Partick.

SMITH, JAMES S., Draughtsman, c/o Miss Montgomerie, 121 Kenmure Street, Pollokshields, Glasgow.

STEVENSON, GEORGE, Engineer, Hawkhead, Paisley.

WATSON, JOHN, Mechanical Engineer, c/o Alexander Fleming, Esq., 9 Woodside Crescent, Glasgow.

THE THIRD GENERAL MEETING was held in the Hall of the Institution, 207 Bath Street, on Tuesday, 20th December, 1898, at 8 P.M.

Mr GEORGE RUSSELL, President, occupied the chair.

The Minutes of the General Meeting held on 22nd November, 1898, were read, confirmed, and signed by the President.

The discussions on the following papers were begun and adjourned:—

On "Feed-Water Filters," by Mr A. E. SHUTE; and

On "Meters and Systems of Charging for Electric Energy," by Mr WILLIAM ARNOT.

Thereafter a paper was read by *Professor* J. HARVARD BILES on "M. Tchebycheff's Formula."

The President announced that the following candidates had been elected, viz.:—

AS MEMBERS:—

BUDENBERG, CHRISTIAN FREDERICK, Engineer, 31 Whitworth Street, Manchester.

GARDNER, WALTER, Engineer and Boilermaker, 8 Percy Street, Ibrox, Glasgow.

LEWIN, HARRY W., Mining Engineer, 154 West Regent Street, Glasgow.

MACALPINE, JOHN H., Marine Engineer, Rossbank, Port-Glasgow.

MACKECHNIE, JOHN, Consulting Engineer, 342 Argyle Street, Glasgow.

M'LAREN, THOMAS, Engineer and Marine Surveyor, 342 Argyle Street, Glasgow.

POOLE, WILLIAM JOHN, Electrical Engineer, 19 Waverley Park, Shawlands, Glasgow.

STEVEN, JOHN WILSON, Civil Engineer, 18 Sandyford Place, Glasgow.

AS MEMBERS FROM GRADUATES' SECTION:—

FRYER, TOM JEFFERSON, Engineer, 20 and 22 Change Alley, Sheffield.

JACKSON, HAROLD D., Engineer Manager, 250 Byres Road, Glasgow.

KEMP, DANIEL, Engineer, 69 Prince Edward Street, Crosshill, Glasgow.

MACK, JAMES, Civil Engineer, 22 Rutland Street, Edinburgh.

AS AN ASSOCIATE:—

DOBBIE, W. L., Steel Merchant, 101 Waterloo Street, Glasgow

AS GRADUATES:—

GALBRAITH, HUGH, Engineer, 75 Waterloo Street, Glasgow.

GILMOUR, ANDREW, Engineer Draughtsman, Kadikoi Place, Kilmarnock.

GRUNING, HENRY H., App. Engineer, 5 Park Terrace, Govan.

JUDD, EDWIN H., Mechanical Engineer, 65 South Cromwell Road, Crosshill, Glasgow.

MILLER, JAMES WILLIAM, App. Engineer, Fairfield Company, 13 Drumoyne Drive, Govan.

REID, HENRY P., Engineer, 10 India Street, Partick.

STEELE, DAVID J., Electrical Engineer, Davaar, Albert Drive, Pollokshields.

WRIGHT, THOMAS B., Electrical Engineer, 2 Berkeley Terrace, Glasgow.

THE FOURTH GENERAL MEETING was held in the Hall of the Institution, 207 Bath Street, on Tuesday, 24th January, 1899, at 8 p.m.

Mr GEORGE RUSSELL, President, occupied the chair.

The Minutes of the General Meeting held on 20th December, 1898, were read, confirmed, and signed by the President.

The discussions on the following papers were resumed and concluded :—

On "Feed-Water Filters," by Mr A. E. Shute; and

On "Meters and Systems of Charging for Electric Energy," by Mr WILLIAM ARNOT.

Votes of thanks were awarded to the Authors.

The discussion on *Professor* J. HARVARD BILES' paper on "M. Tchebycheff's Formula" was begun and adjourned.

Thereafter Mr JOHN THOM illustrated and described some Examples of Four-Crank Engines and their Auxiliaries.

The PRESIDENT announced that the following candidates had been elected, viz. :—

AS MEMBERS :—

AAMUNDSEN, JENS L., Shipbuilder, Houston Terrace, Renfrew.

CROSHER, JOHN, Engineer, 87 Portman Street, Kinning Park, Glasgow.

CROSHER, WILLIAM, Mechanical Engineer, 31 Great Wellington Street, Kinning Park, Glasgow.

CRUICKSHANKS, J. E., Engineer Manager, 157 Hope Street, Glasgow.

CUMMING, WM. J. L., Engineer and Bridgebuilder, Motherwell Bridge Co., Motherwell.

DARROCH, JOHN, Shipwright and Engineer, 27 South Kinning Place.

DEMPSTER, JAMES, Engineer, 7 Knowe Terrace, Pollokshields.

FERGUSON, JOHN JAMES, Chief Engineer, Ardendarroch, Ardnadam.

FLEMING, JOHN, Engineer, Dellburn Works, Motherwell.

HARVEY, JAMES, Engineer, 224 West Street.

KING, A. C., Engineer and Bridgebuilder, Motherwell Bridge Co., Motherwell.

LUKE, W. J., Naval Architect, Clydebank Shipbuilding and Engineering Co., Clydebank.

ODAGIRI, ENJU, Engineer, Imperial Japanese Navy, 7 Bentinck St., Glasgow.

ORR, JOHN R., Engineer and Bridgebuilder, Motherwell Bridge Co., Motherwell.

PAUL, H. S., Engineer, Levenford Works, Dumbarton.

PHILIP, WILLIAM LITTLEJOHN, Engineer Manager, 7 Sherbrooke Avenue, Pollokshields.

SMITH, WILLIAM J., Engineer, 7 Newark Drive, Pollokshields.

AS MEMBERS FROM GRADUATES' SECTION:—

AITKEN, H. WALLACE, Mechanical Engineer, Netherlea, Pollokshields, Glasgow.

BISHOP, ALEXANDER, Civil Engineer, 3 Germiston Street, Glasgow.

CONNER, ALEXANDER, Mechanical Engineer, 41 Thornwood Drive, Partick.

COUTTS, FRANCIS, Mechanical Engineer, 25 Roslin Terrace, Aberdeen.

DONALD, B. B., Works Manager, Messrs Arrols' Bridge and Roof Building Co., 275 Onslow Drive, Dennistoun, Glasgow.

DUNLOP, WM., General Manager, N. Odero fu Alesso., Engineers and Shipbuilders, Sestri Ponente, Italy.

LESTER, W. R., Engineer, 11 West Regent Street, Glasgow.

MACKENZIE, JAMES, Engineer, 8 St. Albans Road, Bootle.

M'COLL, PETER, Shipbuilder, 284 Stewartville Place, Partick.

M'MILLAN, JOHN, Mechanical and Electrical Engineer, Corporation Electric Light Station, Dewar Place, Edinburgh.

MOIR, ERNEST W., Engineer, c/o Messrs S. Pearson & Son, 10 Victoria Street, Westminster, London.

AS ASSOCIATES:—

GRAY, WILLIAM, Shipowner, 65 Great Clyde Street, Glasgow.

MACBETH, GEORGE ALEXANDER, Shipowner, 65 Great Clyde Street, Glasgow.

AS GRADUATES:—

BERTRAM, R. M., Draughtsman, 35 Crow Road, Partick.

DAVIES, PERCY M., Draughtsman, 36 Roslea Drive, Dennistoun, Glasgow.

DOUGLAS, CHARLES STUART, Naval Architect, "St. Brides," 12 Dalzell Drive, Pollokshields.

GIBB, JOHN, Mechanical Draughtsman, 43 Waterside Street, Kilmarnock.

HENDERSON, CHARLES A., Electrical Engineer, 251 St. Vincent Street, Glasgow.

M'HOUL, JOHN B., Engineer, 2 Windsor Terrace, Langside, Glasgow.

WHITE, HEDLEY G., Ship Draughtsman, 6 Crown Gardens, Glasgow.

THE FIFTH GENERAL MEETING was held in the Hall of the Institution, 207 Bath Street, on Tuesday, 21st February, 1899, at 8 P.M

Mr ROBERT CAIRD, F.R.S.E., Vice-President, occupied the chair

The Minutes of the General Meeting held on 24th January, 1899, were read, confirmed, and signed by the Chairman.

The discussion on *Professor* J. HARVARD BILES' paper on "M. Tchebycheff's Formula, was resumed and concluded.

On the motion of the Chairman, *Professor* BILES was awarded a vote of thanks for his paper.

The discussion on Mr JOHN THOM'S paper on "Examples of Four-Crank Engines and their Auxiliaries" was postponed.

Thereafter Mr C. A. MATTHEY read a paper on "The Mechanics of the Centrifugal Machine."

The CHAIRMAN announced that the following candidates had been elected, viz. :—

AS MEMBERS.

ANDERSON, ANDREW, Mechanical Engineer, c/o Clinton, 13 Holmhead Street, Glasgow.

BOWDEN, GEORGE HARLAND, Electrical Engineer, 53 Bothwell Street, Glasgow.

FUJII, JERUGORS, Chief Engineer, Imperial Japanese Navy, 8 Sutherland Terrace, Dowanhill. Glasgow.

HORNE, GEORGE S., Consulting Engineer, 18 Berkeley Terrace, Glasgow.

MANSON, JAMES, Locomotive Superintendent, G. & S. W. Railway, Kilmarnock.

M'FARLANE, HUGH, Mechanical Engineer, 499 Duke Street, Glasgow.

M'LACHLAN, EWEN, Mechanical Engineer, 4 Abbotsford Place, Glasgow.

RIDDELL, W. G., Engineer, 296 Renfrew Street, Glasgow.

SELBY-BIGGE, D., Electrical Engineer, 27 Mosley Street, Newcastle-on-Tyne.

TERANO, SEIICHI, Assistant Professor of Naval Architecture, Imperial University, Tokio, Japan; 27 Derby Street, Glasgow.

AS MEMBERS FROM GRADUATES' SECTION.

PEACOCK, JAMES, Mechanical Engineer, 6 Doune Gardens, Glasgow, West.

REID, JAMES G., Naval Architect, Renfrew House, Renfrew.

AS A GRADUATE.

WALLACE, JOHN, Draughtsman, 224 Meadowpark Street, Glasgow.

THE SIXTH GENERAL MEETING was held in the Hall of the Institution, 207 Bath Street, on Tuesday, 21st March, 1899, at 8 P.M.

Mr GEORGE RUSSELL, President, occupied the chair.

The Minutes of the General Meeting held on 21st February, 1899, were read, confirmed, and signed by the President.

The Discussion on Mr JOHN THOM'S paper on "Examples of Four-crank Engines and their Auxiliaries" was begun and concluded.

On the motion of the President, Mr THOM was awarded a vote of thanks for his paper.

The discussion on Mr C. A. MATTHEY'S paper on "The Mechanics of the Centrifugal Machine" was postponed.

The following papers were read:—

On "The Machinery of the Clyde Trustees' No. 3 Graving Dock," by Mr GEORGE H. BAXTER; and on "Comparisons of Similar Structures and Machines," by *Professor* ARCHIBALD BARR, D.Sc.

The PRESIDENT announced that the following candidates had been elected, viz.:—

AS MEMBERS:—

ABERCROMBIE, ROBERT GRAHAM, Mechanical Engineer, Broad Street Engine Works, Alloa.

BALFOUR, GEORGE, Electrical Engineer, 377 Paisley Road, West, Glasgow.

BOWSER, CHARLES HOWARD, Ironfounder, Charles Street, St. Rollox, Glasgow.

DONALD, DAVID P., Engineer, Johnstone.

EWEN, PETER, Manager, The Barrowfield Ironworks, Ltd., Craigielea, Bothwell.

FEDDEN, SAMUEL EDGAR, Electrical and Mechanical Engineer, Municipal Buildings, Greenock.

HAMILTON, W. D., Engineer and Marine Surveyor, 116 St. Vincent Street, Glasgow.

JOHNSTONE, GEORGE, Assistant Superintendent, Messrs Mackinnon, Mackenzie, & Co., Calcutta.

LOCKYER, NORMAN J., Works Manager, Atlas Works, Glasgow.

MACDONALD, JOHN, Consulting Mechanical Engineer, 146 West Regent Street, Glasgow.

M'DOWALL, H. J., Engineer, Johnstone.

M'INDOE, JOHN B., Electrical Engineer, Scottish House to House Electricity Co., Coatbridge.

MACOUAT, R. B., Bolt and Rivet Manufacturer, Victoria Bolt and Rivet Works, Cranstonhill, Glasgow.

REID, ROBERT SHAW, Consulting Engineer, 161 Hope Street, Glasgow.

ROBSON, GEORGE J., Consulting Engineer, 22 Bath Street, Glasgow.

WEBSTER, JAMES, Engineer, Chief Draughtsman, Messrs Sharp, Stewart, & Co., Ltd., Atlas Works, Springburn, Glasgow.

WILLIAMSON, ALEXANDER, Marine Superintendent, 67 Esplanade, Greenock.

TRANSFER FROM ASSOCIATES' SECTION:—

HUNTER, JOHN, Messrs Sir William Arrol & Co., Ltd., Dalmarnock Iron Works, Glasgow.

AS GRADUATES:—

BINLEY, WILLIAM (Jun.), Asst., Draughtsman, Navy Department, U.S.A. Box 36, Newport, News, Virginia, U.S.A.

BROWN G. J. L., Engineer, 2 Sandringham Terrace, Ayr.

THE ANNUAL GENERAL MEETING was held in the Hall of the Institution, on Tuesday, 25th day of April, 1899, at 8 P.M.

Mr GEORGE RUSSELL, President, occupied the Chair.

The Minutes of the General Meeting, held on 21st March, 1899, were read, approved, and signed by the President.

On the motion of the President, Professor W. H. Watkinson and Mr James Gilchrist were appointed to scrutinise the balloting papers.

The scrutineers having retired and submitted their report, the President announced that Mr ROBERT CAIRD, F.R.S.E., had been elected President; Professor ARCHIBALD BARR, D.Sc., Vice-President; and Messrs WILLIAM BEARDMORE, A. S. BIGGART, THOMAS KENNEDY, HENRY A. MAVOR, and R. T. MOORE, Members of Council for Sesssions 1899-1900 and 1900-01.

On the motion of the President, seconded by Mr James Gilchrist, Mr JAMES M. GALE was re-elected Treasurer for the same period.

On the motion of Mr Matthew Paul, Messrs PETER STEWART and W. A. CHARLTON were re-elected Auditors of the Annual Accounts.

The following awards were made for papers read at the ordinary meetings during the Session 1897-98 :—

1. A Premium of Books to Mr T. R. MURRAY, for his paper on "The Theory and Practice of Mechanical Refrigeration."

2. A Premium of Books to Professor E. J. MILLS, D.Sc., F.R.S., for his paper on "Photo-Surveying."

3. A Premium of Books to Mr F. J. ROWAN, for his paper on "Water-Tube Boilers."

4. A Premium of Books to Mr G. GRETCHIN, for his paper on "Notes on the Belleville Boilers of the T.S.S. 'Kherson.'"

The President announced that an Excursion had been arranged by the Council to take place on Friday, 23rd June, and that circulars would shortly be issued with particulars of the arrangements.

The discussions on the following papers were begun and concluded, votes of thanks being awarded the authors :—

On "The Mechanics of the Centrifugal Machine," by Mr C. A. MATTHEY.

On "The Machinery of the Clyde Trustees' No. 3 Graving Dock," by Mr GEORGE BAXTER; and

On "Comparisons of Similar Structures and Machines," by Professor ARCHIBALD BARR, D.Sc.

On the motion of Mr James Gilchrist, a vote of thanks was awarded the President on his retiral from the Presidential Chair.

The President announced that the following Candidates had been elected; viz. :—

AS MEMBERS :—

CAMPBELL, WALTER HOPE, Engineer, 42 Krestchatik, Kieff, South Russia.

LEE, HARRISON WM., Mechanical Engineer, c/o Mrs M'Intyre, 42 Hill Street, Garnethill, Glasgow.

MINTY, WILLIAM, Mechanical Engineer, 15 Princes Street, Pollokshields, Glasgow.

M'LELLAN, ARCHIBALD, Manager, Steel Company of Scotland, Ltd., 27 India Street, Glasgow.

STRATHERN, ALEXANDER G., Mechanical Engineer, Hillside, Stepps, N.B

REPORT OF THE COUNCIL.

SESSION 1897-98.

In presenting its Annual Report the Council has pleasure in stating that the past Session has been in every way highly satisfactory. The addition to the roll and the attendance at the meetings have been greater than during any previous Session. The increase in membership is set forth in the following tabular statement:—

Session 1896-1897.		Session 1897-1898.		Increase.
Honorary Members,	10	... ...	9	-1
Members, ...	601	... ...	719	118
Associates, ...	47	... ...	66	19
Graduates, ...	239	... ...	274	35
Total, - -	897	... ...	1068	171

The Summer Meeting held at Sheffield on June the 15th, 16th, and 17th, 1898, proved an unqualified success.

The members and their friends received a most cordial welcome, and were hospitably entertained by the Lord Mayor, Master Cutler, and other influential citizens of Sheffield. In this connection the Council desires to place on record its appreciation of the services of the Local Reception Committee at Sheffield, and considers that the best thanks of the Institution are due to the Secretary and members of the Arrangements Committee, for the admirable manner in which the proceedings were carried out.

For some years past this Institution has had the privilege of electing four representatives to act on the Technical Committee of Lloyd's Register (two engineers and two shipbuilders). The

expenses in connection with which representation have been borne by Lloyd's Committee.

A similar privilege has more recently been accorded this Institution of electing four representatives to act as Technical advisers on the Board of Trade Consultative Committee (two engineers and two shipbuilders). As yet no arrangement has been made with regard to meeting the expenses in this connection.

Mr JAMES WEIR was elected to fill the vacancy in the representation of this Institution on the Board of Trade Consultative Committee, caused by the resignation of Mr William Morison.

Mr JOHN WARD has, for the past Session, represented the Institution on the Board of Governors of the Glasgow and West of Scotland Technical College.

Mr JAMES MOLLISON was elected to represent this Institution on the Board of Governors of the Glasgow School of Art, in succession to Sir Renny Watson.

The Council is pleased to notice that more liberal advantage has been taken of the facilities afforded in the Library both with respect to the reference and circulating departments.

The meetings held by the Graduates' Section were six in number, the opening meeting being devoted to an address from the President, Mr James G. Reid. At those meetings the following papers were read and discussed:—

"Some Practical Outlines of Ship Designing," by Mr A. J. Kay.

"An Approximate Method of fixing Cut-off, Mean Pressures, etc.," by Mr T. C. Jones.

"Steam Ship Machinery," by Mr John Orr.

"Resistance and Speed of Ships," by Mr Edward H. Parker, Secretary of the Institution.

"The Horsfall Refuse Destructor," by Mr Joseph Paterson.

The Silver Medal for the best paper read in this Section was awarded to Mr John Orr.

The Council regrets to have to announce the loss this Institution has sustained by death of the following:—Honorary Member, Sir

Henry Bessemer; Members, Messrs David Rowan (Past President), Archibald B. Allan, William Cowan, Frederick Colthurst Kelson, Hugh M'Coll, David M'Culloch, James Scott, William Taylor, and William Menzies; Graduate, Mr David Henderson.

The Treasurer's Statement, herewith appended, indicates that the total capital, including the Medal funds, amounts to £3,990 1s 9d½, compared with £3,737 14s 8½d at the close of the previous Session.

TREASURER'S
INCOME AND EXPENDITURE ACCOUNT
GENERAL

ORDINARY INCOME.			1897-98.	1896-97.
I. *Annual Subscriptions received*—				
616 Members at £1 10 0	£924 0 0			£795 0 0
61 Associates ,, 1 0 0	61 0 0			45 0 0
241 Graduates ,, 0 10 0	120 10 0			101 0 0
	£1105 10 0			
Less appropriated by Office Boy,	40 0 0		£1065 10 0	[941 0 0]
II. *Arrears of Subscriptions received*—			33 10 0	44 0 0
III. *Sales of Transactions*, ...		...	9 7 3	10 8 8½
IV. *Interests and Rents*—				
Interest on Clyde Trust Mortgage for £300, less tax, ...	£9 8 6			9 8 6
Do. £35, proportion of Glasgow Corporation Mortgage for £750, less tax, ...				0 18 1
Students' Institute C.E., for use of Library, ...	12 0 0			11 18 0
Interest on Deposit Receipts, *less* Interest on Bank A/c, £1 10/8,	1 11 4		22 19 10	2 3 7
				[24 8 2]
			£1131 7 1	£1019 16 10½

EXTRAORDINARY INCOME.

Surplus of Ordinary Income brought down ... —	£46 9 0		£12 8 8½
Do. from "James Watt" Dinner,	4 12 2		2 5 10
Balance, being Deficiency ...			592 12 7½
		£51 1 2	[607 7 2]
		£51 1 2	£607 7 2

STATEMENT.

FOR YEAR ENDING 30TH SEPTEMBER, 1898.

FUND.

ORDINARY EXPENDITURE.		1897-98.	1896-97.
I. *General Expenses*—			
Secretary's Salary, ...	£300 0 0		£300 0 0
Institution's proportion of net cost of maintenance of Buildings,	102 0 3½		198 8 11
Interest on Medal Funds invested in Buildings, ...	21 12 0		18 14 3
Library Books, ...	30 1 0		19 15 2
Binding Periodicals and Papers,	12 18 1		6 7 11
Stationery and Postages, etc.,	30 5 0		23 3 10
Travelling Expenses, ...			12 10 0
Office Expenses, ...	41 17 3		7 16 0
Advertising, Insurance, etc., ...	2 8 6		1 17 0
Assistance at Meetings, ...	2 6 1		. . .
		543 8 2½	[583 18 1]
II. "*Transactions*" *Expenses*—			
Printing and Binding,	£330 17 6		260 14 9
Lithography, ...	127 10 9		85 7 0
Postages, ...	51 16 10½		56 17 10
Reporting, ...	12 4 3		14 19 0
Delivery of Annual Volume, ...	8 17 6		5 11 6
		531 6 10½	[403 10 1]
III. *Awards*—			
Premiums for Papers, ...		10 8 0	15 0 0
IV. *Surplus* carried down, ...		46 9 0	12 8 8½
		£1131 7 1	£1019 16 10½

EXTRAORDINARY EXPENDITURE.		
Honorarium to late Secretary, ...		£500 0 0
Balance of late Secretary's Salary, ...		37 10 0
Printing and Advertising *re* Secretaryship, ...		7 17 2
Arrears of Subscriptions, reduction in valuation written off, ...		62 0 0
Balance, being surplus, ...	51 1 2	
	£51 1 2	£607 7 2

BALANCE SHEET, AS AT

LIABILITIES.			As at 30th Sept., 1898.	*As at 30th Sept., 1897.*
I. *Sundry Creditors,* ...		... ...	£21 2 3½	*£481 3 4*
II. *Subscriptions* paid in advance,		... ...	29 10 0	*4 0 0*
III. *Medal Funds—*				
Marine Engineering—				
Balance as at 1st Oct., 1897,	£495 1 5			
Interest received during year,	13 10 9			
		508 12 2		*495 1 5*
Railway Engineering—				
Balance as at 1st Oct., 1897,	£304 17 10			
Interest received during year,	7 17 4			
		312 15 2		*304 17 10*
Graduates'—				
Balance as at 1st Oct., 1897,	£26 17 10			
Cost of medal, £1 7s 6d; *less* interest received during year, 15s 4d,	0 12 2			
		26 5 8		*26 17 10*
			847 13 0	*[826 17 1]*
IV. *Capital Accounts—*				
General Fund—				
Balance as at 1st Oct., 1897,	£998 17 6½			
Surplus, 1897-98,	51 1 2			
		1049 18 8½		*998 17 6½*
Building Fund—				
Balance as at 1st Oct., 1897,	£1912 0 1			
Life Members' Subscriptions, £120; Entry money, £65 10s, less appropriated by Office Boy £5.	180 10 0			
		2092 10 1		*1912 0 1*
			3142 8 9½	*[2910 17 7½]*
			£4040 14 1	*£4222 18 0½*

30TH SEPTEMBER, 1898.

ASSETS.			As at 30th Sept., 1898.	*As at 30th Sept., 1897.*
I. *Heritable Property*—				
Total Cost, £7094 16 3				
Of which one-half belongs to Institution, ...	£3547 8 1			
Less Institution's proportion of Bond, ...	500 0 0			
			£3047 8 1	*3047 8 1*
II. *Investment*—				
Clyde Trust Mortgage, ...			300 0 0	*300 0 0*
III. *Books in Library*—				
Valued at, say			500 0 0	*500 0 0*
IV. *Furniture and Fittings*—				
Valued at, say			65 10 0	*65 10 0*
V. *Rent due but unpaid*—			. . .	*10 0 0*
VI. *Arrears of Subscriptions*—				
Session 1897-98—				
36 Members at £1 10/,	£54 0 0			
4 Associates at £1,	4 0 0			
37 Graduates at 10/,	18 10 0			
Entry Money,	3 15 0			
	£80 5 0			
Previous sessions—				
17 Members, £51 0 0				
1 Associate, 1 0 0				
22 Graduates, 17 0 0				
	£69 0 0			
Total,	£149 5 0			
Valued at, say			50 0 0	*50 0 0*
VII. *Cash*—				
In Bank,				
On Deposit Receipt, £86 3 1				
On Current Account, 7 19 5				
	£94 2 6			
Less due to Secretary	16 6 6			
			77 16 0	*249 19 11½*
			£4040 14 1	*£4222 13 0½*

ABSTRACT OF "HOUSE EXPENDITURE" ACCOUNT FOR SESSION 1897-98.

INCOME.		12 months, to 30th Sep., 1898.	*11 months, to 30th Sep., 1897.*
Rents for Letting Rooms, ...		£74 7 6	*£57 5 0*
Balance, being excess Expenditure, ...		224 6 7	*396 17 10*
Payable by Institution, ...	£102 0 3½		
,, ,, Philosophical Society,	122 6 3½		
		£298 14 1	*£454 2 10*

EXPENDITURE.	12 months, to 30th Sep., 1898.	*11 months, to 30th Sep., 1898.*
Salary to Curator, ...	£135 0 0	*£125 16 8*
Salary to Attendant at Library, Cleaning, etc., ...	52 6 7	*38 0 0*
Feu-duty, Taxes, and Insurance.	22 1 0½	*40 15 8½*
Interest on Bond, ...	49 6 0	*101 10 0*
Alterations, Repairs & Renewals,	7 14 10	*110 9 10*
Coal, Gas, and Electric Light,	29 8 0	*36 7 1*
Stationery, Postages, and Incidental Expenses, ...	2 17 7½	*1 3 6½*
	£298 14 1	*£454 2 10*

Note.—The Account of the House Committee, of which the above is an abstract, is kept by Mr John Mann, C.A., Treasurer to the Committee, and is periodically audited by the Auditors appointed by the Institution and the Philosophical Society.

EDWARD H. PARKER, *Secretary to the House Committee.*

GLASGOW, 18*th October*, 1898.—We have examined the foregoing Financial Statement of the Treasurer, the Accounts of the Marine and Railway Engineering Medal Funds, the Graduates' Medal Fund, the Building Fund, and the House Expenditure Account, and find the same duly vouched and correct, the Amounts in Bank being as stated.

(Signed) PETER STEWART, W. A. CHARLTON, } AUDITORS.

REPORT OF THE LIBRARY COMMITTEE.

THE additions to the Library during the year include 36 volumes by purchase; 11 volumes and 5 pamphlets by donation; while 62 volumes and 75 parts were received in exchange for the "Transactions" of the Institution. Of the periodical publications received in exchange, 23 are weekly, 15 monthly, and 3 quarterly. Sixty-eight volumes were bound during the year.

The Library now comprises 2645 volumes.

As the proceedings of the most important engineering societies are to be found in the Library of the Institution, the Committee begs to draw the attention of Members to the existence of this particular section.

DONATIONS TO THE LIBRARY.

Addison, W. Innes. Roll of Graduates of the University of Glasgow, 1727-1897, with biographical notes. 4to; Glasgow, 1898. From Glasgow University Court.

Armstrong, Lord. Electric Movement in Air and Water; 2 Vols. 1897 and 1899.

Atlay, J. B. Trial of Lord Cochrane before Lord Ellenborough, 1897. From Mr Edward Downs Law.

Barr, Prof. Arch. Summary of Lecture on Comparisons of Similar Structures, Large and Small. (Transactions Inst. Junior Engineers, Vol. VII., Part 3.) Pamphlet; 1897.

Fowler's "Mechanical Engineer" Pocket Book, 1899. From the Publishers.

Glasgow University Calendar, 1898-99. From the University.

Glasgow and West of Scotland Technical College Calendar, 1898-99. From the Governors.

Hiller, E. G. Working of Steam Boilers: Being Instructions respecting the Working, Treatment, and Attendance of Steam Boilers. Pamphlet; 1898. From the National Boiler Insurance Company.

Journal of the Iron and Steel Institute. General Index, Vols. 1-50, 1869-96. 8vo; London, 1898.

Lloyd's Register of Shipping, 2 Vols., and 1 Vol. of Rules and Regulations, 1898-99. From Lloyd's Committee.

Manchester Steam-Users' Association; Memorandum by the Chief Engineer; 1898. From the Author.

Mills, H. F. Experiments upon Piezometers used in Hydraulic Investigations (Proceedings American Academy of Arts and Sciences). Pamphlet; 1878. From the Author.

Report of the Naval Court of Inquiry upon the destruction of the U.S. Battle Ship "Maine" in Havana Harbour, February 15th, 1898. From U.S. Government.

Report of Committee on the Thermal Efficiency of Steam Engines, 1898. From the Institution of Civil Engineers.

The Steamship: An Illustrated Monthly Scientific Journal devoted to the interests of Shipbuilders, Marine Engineers, Electricians, and Shipowners. Edited by John Lockie. Vol. 9. July, 1897—June, 1898. From the Editor.

BOOKS ADDED TO THE LIBRARY BY PURCHASE.

Adams, H. Handbook for Mechanical Engineers; 4th Ed., 1897.

Attwood, E. L. Text-Book of Theoretical Naval Architecture, 1899.

Bjorling, P. R. Construction of Pump Details; 1892.

Brassey's Naval Annual, 1898.

Cole, W. H. Light Railways at Home and Abroad; 1899.

Colyer, F. Treatise on Modern Steam Engines and Boilers. 4to; 1886.

Crimp, W. S. Sewage Disposal Works: A Guide to the Con-

struction of Works for the Prevention of the Pollution by Sewage of Rivers and Estuaries; 2nd Edition, 1894.

Dawson, Philip. Electric Railways and Tramways; their Construction and Operation. 4to; 1897.

Durand, W. F. Resistance and Propulsion of Ships. New York, 1898.

Fitzmaurice, M. Plate-Girder Railway Bridges; 1895.

Foden, J. Boilermakers' and Iron Shipbuilders' Companion; 4th Edition, 1892.

Hughes, G. Construction of the Modern Locomotive; 1894.

Hutton, W. S. Steam-Boiler Construction; 1898.

Johnson, F. R. Stresses on Girder and Roof Trusses.

Knight C. The Mechanician: A Treatise on the Construction and Manipulation of Tools; 5th Edition, 4to; 1897.

Liversidge, John G. Engine-Room Practice: A Handbook for the Royal Navy and Merchant Marine; 1899.

Lockert, L. Petroleum Motor-Cars; 1898.

Millar, W. J. Latitude and Longitude: How to find them; 1896.

Mills, W. H. Railway Construction; 1898.

Moore, E. C. S. Sanitary Engineering: A Practical Treatise on the Collection, Removal, and Final Disposal of Sewage, and Construction of Works of Drainage and Sewage; 1898

Naval Science: A Quarterly Magazine for promoting the Improvement of Naval Architecture, Marine Engineering, Steam Navigation, and Seamanship. Edited by E. J. Reed and Joseph Woolley. Vols. 1-4, 1872-75.

Peake, J. Elementary Principles of Naval Architecture, chiefly as applied to Wooden Vessels. Reprinted from the Edition of 1867. London, 1897.

Perry, J. Calculus for Engineers; 2nd Edition, 1897.

Pettigrew, W. F. Manual of Locomotive Engineering, with an Historical Introduction. Also with a Selection on American and Continental Engines, by A. F. Ravenshear; 1899.

Robinson, H. Hydraulic Power and Hydraulic Machinery; 2nd Edition, 1893.

Schwackhöffer, F. Fuel and Water, with special chapters on Heat and Steam Boilers; Edited by W. R. Brown, 1884.

Ser, L. Traité de Physique Industrielle Production et Utilization de la Chaleur. 2 Vols., Paris, 1888-92.

Vol. I.—Principes généraux, Foyers Récepteurs de Chaleur, Cheminées, Ventilateurs, etc., Thermo-Dynamique.

Vol. II.—Chaudières a Vapeur, Distillation, Evaporation, Désinfection, Chauffage et Ventilation des lieux habités.

Sexton, A. H. Elementary Text-Book of Metallurgy; 1895.

Spons' Mechanics' Own Book: A Manual for Handicraftsmen and Amateurs; 4th Edition, 1893.

Thearle, S. J. P. Naval Architecture; A Treatise on Laying-Off and Building Wood, Iron, and Composite Ships, with 4to Volume of Plates.

Thearle, S. J. P. Theoretical Naval Architecture: A Treatise on the Calculations involved in Naval Design. Vol. I., text.

Yahow, Hans. Hilfsbuch für den Schiffbau; Berlin, 1884.

Yeo. J. Steam and the Marine Steam Engine; 1894.

THE INSTITUTION EXCHANGES TRANSACTIONS WITH THE FOLLOWING SOCIETIES, &C.:—

American Institute of Electrical Engineers.
American Philosophical Society.
American Society of Civil Engineers, New York.
American Society of Mechanical Engineers, New York.
Association des Ingénieurs, Gand, Belgium.
Austrian Engineers' and Architects' Society, Vienna.
Bristol Naturalists' Society, Bristol.
Bureau of Steam Engineering, Navy Department, Washington.
Canadian Institute, Toronto.
Canadian Society of Civil Engineers, Montreal.
Edinburgh Architectural Association.
Engineering Association of New South Wales, Sydney.

Engineering Society of the School of Political Science, Toronto.
Engineers' and Architects' Society of Naples, Naples.
Franklin Institute, Philadelphia, U.S.A.
Geological Survey of Canada, Montreal.
Hull and District Institution of Engineers and Naval Architects, Hull.
Institute of Marine Engineers, London.
Institution of Civil Engineers, London.
Institution of Civil Engineers of Ireland, Dublin.
Institution of Junior Engineers, London.
Institution of Mechanical Engineers, London.
Institution of Naval Architects, London.
Iron and Steel Institute, London.
Liverpool Engineering Society, Liverpool.
Liverpool Polytechnic Society, Liverpool.
Literary and Philosophical Society of Manchester, Mancehster.
Lloyd's Register of British and Foreign Shipping, London.
Manchester Association of Engineers, Manchester.
Master Car Builders' Association, Chicago, U.S.A.
Midland Institute of Mining, Civil, and Mechanical Engineers, Barnsley.
Mining Institute of Scotland, Hamilton.
North-East Coast Institution of Engineers and Shipbuilders, Newcastle-on-Tyne.
North of England Institute of Mining and Mechanical Engineers, Newcastle-on-Tyne.
Patent Office, London.
Philosophical Society of Glasgow.
Royal Academy of Sciences, Lisbon.
Royal Dublin Society, Dublin.
Royal Scottish Society of Arts, Edinburgh.
Royal Society of Tasmania, Hobart.
Sanitary Institute of Great Britain, London.
Scientific Library, U.S. Patent Office, Washington, U.S.A.
Shipmasters' Society, London.
Smithsonian Institution, Washington, U.S.A.

Société d'Encouragement pour l'Industrie Nationale, Paris.
Société des Ingénieurs Civils de France, Paris.
Société des Sciences Physiques et Naturelles de Bordeaux, Bordeaux.
Société Industrielle de Mulhouse, Mulhouse.
Society of Arts, London.
Society of Arts, Massachusetts Inst. of Technology, Boston.
Society of Engineers, London.
Society of Naval Architects and Marine Engineers, Washington, U.S.A.
South Wales Institute of Engineers, Swansea.
Technical Society of the Pacific Coast, San Francisco, U.S.A.
West of Scotland Iron and Steel Institute, Glasgow.

COPIES OF THE TRANSACTIONS ARE FORWARDED TO THE FOLLOWING COLLEGES, LIBRARIES, &c. :—

Advocates' Library, Edinburgh.
British Corporation for the Survey and Registry of Shipping, Glasgow.
Cornell University, Ithaca, U.S.A.
Dumbarton Free Public Library, Dumbarton.
Glasgow and West of Scotland Technical College, Glasgow.
Glasgow University, Glasgow.
Lloyd's Office, London.
Mercantile Marine Service Association, Liverpool.
M'Gill University, Montreal.
Mitchell Library, Glasgow.
Royal Naval College, Greenwich.
Stevens Institute of Technology, Hoboken, U.S.A.
Stirling's Library, Glasgow.
Trinity College, Dublin.
Underwriters' Rooms, Glasgow.
Do. Liverpool.
University College, London.
Yorkshire College, Leeds.

PUBLICATIONS RECEIVED PERIODICALLY IN EXCHANGE FOR INSTITUTION TRANSACTIONS:—

American Manufacturer and Iron World.
Cassier's Magazine.
Colliery Guardian.
Contract Journal.
Engineer.
Engineering.
Engineering Magazine.
Engineering and Mining Journal.
Engineers' Gazette.
Indian Engineering.
Industries and Iron.
Iron and Coal Trades' Review.
Iron and Steel Trades' Journal.
Journal de l'Ecole Polytechnic.
L'Industria.
Machinery.
Machinery Market.
Marine Engineer.
Mariner.
Mechanical World.
Nature.
Portfeuille Economique des Machines
Practical Engineer.
Revue Industrielle.
Shipping World.
Stahl und Eisen.
Steamship.
Syren and Shipping.
The Indian and Eastern Engineer.
Transport.

FRANK P. PURVIS,
Hon. Librarian and Convener.

The Library of the Institution is open daily (except Saturdays) during the Winter Session from 9.30 A.M. till 8 P.M., and on Meeting Nights of the Institution and Philosophical Society till 10 P.M.; throughout the Summer months from 9.30 A.M. till 5 P.M., save during July, when it is closed for the Glasgow Fair Holidays, and open for the remainder of the month from 1 P.M. to 5 P.M.: and every Saturday from 9.30 A.M. till 2 P.M., during the Winter Session, and from 9.30 A.M. till 1 P.M. during the Summer months.

Books will be lent on presentation of Membership Card to the Sub-Librarian.

Members have also the privilege of consulting the Books in the Library of the Philosophical Society.

The use of the Library and Reading Room is open to Members, Associates, and Graduates.

The Portrait Album lies in the Library for the reception of Members' Portraits. Members are requested when forwarding Portraits to attach their Signatures to the bottom of Carte.

The Library Committee are desirous of calling the attention of Readers to the "Recommendation Book," where entries can be made of titles of books suggested as suitable for addition to the Library.

Copies of the Library Catalogue and Supplement, price 6d; or separately, 3d each, may be had at the Library, or from the Secretary.

A List of the Papers read and Authors' Names, from the First to the Thirty-Third Sessions, will be found in Vol. XXXIII. of the Transactions.

As arranged by the Council, a Register Book for Graduates now lies in the Library for the inspection of Members, the object being to assist Graduates of the Institution in finding suitable appointments.

Annual Subscriptions are due at the commencement of each Session; viz.:—

MEMBERS, £1 10s; ASSOCIATES, £1; GRADUATES, 10s.

LIFE MEMBERS, £20; LIFE ASSOCIATES, £15.

Membership Application Forms can be had from the Secretary or from the Librarian, at the Rooms, 207 Bath Street.

The Council, being desirous of rendering the Transactions of the Institution as complete as possible, earnestly request the co-operation of Members in the preparing of Papers for reading and discussion at the General Meetings.

Early notice of such Papers should be sent to the Secretary, so that the dates of reading may be arranged.

Copies of the reprint of Vol. VII., containing a paper on "The Loch Katrine Water Works," by Mr J. M. Gale, C.E., may be had from the Secretary; price to Members, 7s 6d.

Members of this Institution, who may be temporarily resident in Edinburgh, will, on application to the Secretary of the Royal Scottish Society of Arts, at his office, 117 George Street, be furnished with Billets for attending the meetings of that Society.

The Meetings of the Royal Scottish Society of Arts are held on the 2nd and 4th Mondays of each month, from November till April, with the exception of the 4th Monday of December.

OBITUARY.

Members.

GEORGE ALEXANDER AGNEW was born at Stranraer on 23rd October, 1853, and received his education at his native place. From Stranraer he went to Dumbarton and entered the service of Messrs Denny & Co. as an apprentice in their engine shop, but not finding the work there quite congenial he went to the shipbuilding yard of Messrs William Denny & Brothers, where, after becoming acquainted with the practical details of ship construction, he entered the drawing office of that firm. In 1877, when the original firm of Messrs Robert Napier & Sons was taken over by Messrs Hamilton and the late Dr. Kirk, Mr Agnew was, on the recommendation of the late Dr. Peter Denny, appointed their chief draughtsman. In 1884 he became manager of the shipbuilding yard, and when the firm was converted into a limited liability Company he was elected a director. During his connection as manager with the firm of Messrs Robert Napier & Sons, some of the finest war ships and merchant vessels afloat were constructed under his direction.

Mr Agnew died somewhat suddenly at Grantown-on-Spey, on 1st August, 1899.

He became a member of the Institution in March, 1883.

DAVID AULD was born at Westmuir, on the outskirts of Glasgow, on 31st July, 1809. At the early age of twelve years he was employed as an engine-tender in a quarry. After serving in that capacity for some time he was induced, by the late Mr

David Elder, to join a steamship, on board of which he gained an extensive sea experience. Mr Auld started in business for himself in 1844, after having patented apparatus for economising fuel in boilers; the apparatus at that time being in great demand by steam users. He was probably the original inventor and maker of Steam Reducing-Valves, his first patent for such dating as far back as 1850. Subsequently he patented appliances for boiler feeding, smoke preventing, superheating, and also a self-acting damper apparatus. Mr Auld was particularly zealous in the discharge of his professional work, was of a genial and kindly nature, and was highly esteemed by his employees and a large circle of friends. In 1890 he had an apoplectic attack, after which his health failed. He died on 25th February, 1899, in the ninetieth year of his age.

He became a member of the Institution at its foundation in 1857.

EDWARD WALTON FINDLAY, born in Glasgow on the 25th November, 1848, was educated at the Collegiate Academy, Garnethill, Glasgow, and the Greenrow School at Silloth, Cumberland. He was trained in engineering at the works of Messrs Randolph, Elder & Co., Centre Street, Glasgow, having commenced his career there in the pattern shop on 2nd October, 1865. In July, 1868, he entered the drawing office of the firm, and by the end of the third year from that time occupied a prominent position on the staff. The esteem in which he was held by his employers was shown in his being chosen to represent them on the occasion of the first voyage of s.s. "Propontis," with the new triple-expansion engines by Messrs John Elder & Co., and Rowan & Horton's water-tube boilers, for steam at 150 lbs. pressure.

He left Messrs John Elder & Co.'s employment in December, 1875, and accepted the post of manager to Messrs Lees, Anderson & Co., Clyde Street, Glasgow. He remained with that firm for about eighteen months, but not finding the work congenial, retired and

became confidential assistant to Mr F. J. Rowan in some consulting work and in an effort to introduce American wood-working machinery into Scottish workshops.

Early in 1878 the late Mr Charles Randolph, as a Director of what is now Nobel's Explosives Co., Ltd., was instrumental in getting Mr Findlay appointed as engineer and principal assistant to Mr George M'Roberts, then the manager of the Ardeer Works. In that position he remained till his lamented death on 14th December, 1898, and to its duties the best energies of his life were devoted; possessing, as he did, the entire confidence of Mr M'Roberts and his successor Mr C. O. Lundholm, as well as that of the Directors of the Company. On several occasions he was entrusted with important missions on behalf of the Company, in various parts of Europe, Africa, and America. These he successfully accomplished, and the Company also benefited by his engineering skill, which was required not only on account of the great expansion of the works at Stevenston, during his twenty years of service there, but also on account of the acquisition of other factories through the consolidation of the various dynamite interests.

Mr Findlay was for some time President of the Fairfield Association, of which he was an energetic member whilst in the service of Messrs Randolph, Elder & Co. In addition to his Presidential addresses, he contributed a paper to the Association on "Steam Indicators." He was a facile writer and frequently contributed articles of general interest to the daily press. Mr Findlay had also considerable artistic ability, and his free-hand sketches possessed great clearness and completeness of detail. Few of these exist in a permanent form, but happily a substantial monument of Mr Findlay's artistic ability remains in the ornamental fountain designed by him, which was erected on Stevenston Links about a month before he died. In social life Mr Findlay was a universal favourite, and his sympathetic nature and many good qualities endeared him to a wide circle of friends.

Mr Findlay joined the Institution as a Graduate on 23rd

December, 1873, and was transferred to the class of Members on 25th November, 1884.

JOSEPH GOODFELLOW completed an apprenticeship to Messrs Bury, Curtis & Kennedy, Liverpool, in 1841, and for two years thereafter he was employed by Mr Forrester at the Vauxhall Foundry, Liverpool. At the end of 1843 he removed to Crewe, and for the space of twelve months worked there in the Locomotive Workshop, leaving at the request of Mr Buddicum to fill a situation at the Locomotive Works, Rouen, where he remained for three years. He was then engaged by Mr Robert Sinclair, the first locomotive superintendent of the Caledonian Railway Company, and started on 10th January, 1847, as foreman over the turners and fitters in a small workshop belonging to the Glasgow and Greenock Railway Company. That railway was afterwards amalgamated with the Caledonian Railway in 1852. When he entered the service there were three small passenger engines building—Nos. 1, 2, and 3—with 5 feet wheels, and cylinders of 15 inches diameter by 18 inches stroke, which were afterwards made coupled engines. The first of these was steamed in July, 1847, which event was celebrated by a luncheon, this being the first engine built by the Caledonian Railway Company. In 1851 Mr Goodfellow was appointed outdoor Superintendent to look after the engines on the Glasgow and Barrhead Railway, Glasgow and Hamilton section, and the Glasgow and Motherwell branch. At this time the terminus of the Glasgow and Barrhead Railway was at the top of Main Street, a very small wooden erection indeed. The engine shed held three engines, and the remaining shed on the Clydesdale line, built near the present one, only accommodated about fifteen locomotives. Three years later he was appointed to the district of Holytown, and also to the small workshops there, which formerly belonged to the Wishaw and Garnkirk Railway in connection with that district. In 1862

he was appointed works manager at St. Rollox, by the late Mr Benjamin Conner, and held that post during the rest of his career, down to 1897, when he retired after honourably serving the Caledonian Railway Company for the long period of forty-eight years.

Mr Goodfellow died at Ayr on 1st July, 1899, in his seventy-sixth year.

He joined the Institution as a Member in March, 1868.

GEORGE GRAHAM was born on 3rd March, 1822, at Hallhills, in Applegarth Parish, Dumfriesshire, a farm of which his forefathers had been tenants, it is said, for about three centuries. Mr Graham began practical life as an apprentice with the famous Robert Napier in Glasgow, and in that capacity worked at the engines of the first Cunarder, and on those of the first steam war vessels—the "Vesuvius" and "Stromboli." Although thus interestingly associated in his opening manhood with the earliest developments of steam power as applied to navigation, his destinies were to run, not along the great highways of the sea, but on those of the land. His health gave way, and he was compelled to quit Glasgow and recuperate in his native air. In 1845 the real opportunity of his life came with the making of the survey for the Caledonian Railway. Engaged as an amateur assistant, he was brought into contact with Mr Joseph Locke, and when the bill granting powers for the construction of the line was ultimately passed through Parliament, he received an appointment on the staff of Messrs Locke & Errington, the engineers of the line. This was in 1845, and for two years he was not only actively engaged in connection with the laying out of the Beattock and Carlisle line, but also in surveying tracts of country all over the South of Scotland in connection with projected branch lines. When the Beattock and Carlisle railway was completed, Mr Graham was on the engine of the first train, and he thus had the honour of

setting the first railway locomotive in Scotland on its journey. After the opening of this enterprise, which formed the initial track round which the Caledonian Company has constructed its huge system, Mr Graham was engaged in staking off the Canonbie and other sections, joining the Caledonian Railway as civil engineer in September 1847, and taking up his quarters in Glasgow. In 1853, on the retiral of Mr John Collister and Mr Robert Sinclair, he was appointed chief custodier of the permanent way of the Caledonian Company. During the long series of years that have intervened since that time, Mr Graham was identified with the development and maintenance of the physical undertaking of the Caledonian Railway. He was constantly engaged in planning and laying out the various ramifications of the system, combining enormous energy, marvellous perseverance, wonderful skill, and a positive genius for the mastering and marshalling of details; and during the full half-century of his active career in connection with the Company, he was responsible for the outlay of a capital sum of fully forty millions sterling in building up a railway system which is to-day one of the most important railway undertakings in the United Kingdom. Until 1880 the upkeep of the permanent way was his main duty. In that year two divisional engineers were appointed to superintend the maintainence, while he reserved himself for the new works and extension of the system, then covering 775 miles.

To attempt an enumeration of the tasks of fifty-six active and successful years would be hopeless, but it might be mentioned that Mr Graham bridged the Clyde no fewer than seven times, and viaducts of all kinds of his designing in steel and iron and stone carry passengers across the country. His preferences were instinctively conservative, and his bias all for solid and durable construction. Stone bridges were his choice when possible. He considered that stone was more permanent and cheaper to maintain than metal, though the first cost might be more. Had the Caledonian routes not lain so frequently through mineral districts, subject to stone-bridge destroying subsidences, there would have been fewer metal structures on the system.

Some weeks prior to his death he tendered his resignation, which was not to receive effect until 30th June, 1899. Early on the morning of that day he died, still chief-engineer of the Caledonian Railway, and with 45 miles of new railway under construction.

Mr Graham joined the Institution as a Member in March, 1858.

CHARLES RANDOLPH HARVEY was born at Glasgow on 18th December, 1846, and received his education at the Glasgow High School. His engineering career commenced in 1864, when he obtained employment with Messrs Randolph, Elder & Co. About twelve months after the completion of his apprenticeship he entered the service of Messrs John Penn & Sons, Greenwich, and later gained additional engineering experience with Messrs J. & G. Rennie, London. He returned to Glasgow to superintend the erection of the late Mr Randolph's steam road carriage. In January, 1874, he joined the firm of Messrs G. & A. Harvey, Machine Tool Makers, Govan, and retired from business through ill-health in June, 1898. Mr Harvey died at Glasgow on 12th August, 1899.

He joined the Institution as a Graduate in February, 1874, and was transferred to Membership in November, 1880.

WILLIAM LAING was born at Bentend, near Falkirk, on the 13th June, 1837. He commenced a practical training at the works of the Carron Iron Company, Falkirk, and left to complete his apprenticeship at the engineering shops of Messrs Tod & M'Gregor, Glasgow. After serving some years at sea he, about 1870, entered the service of the Carron Steamship Company as Superintendent engineer. He relinquished that post four years later to fill a similar position with Messrs A. Laird & Co., Glasgow. Recognising his abilities that firm subsequently appointed him marine

superintendent of its fleet of steamers, which position he held until his death, which occurred on 24th May, 1899.

Mr Laing became a member of the Institution in 1875.

WILLIAM MENZIES was born on 7th January, 1840, at Leith, where his father, Mr George Menzies, was a well-known shipbuilder. After serving an engineering apprenticeship with Messrs S. and H. Morton of Leith, he worked as journeyman with Messrs Hawthorn and Co. of Leith and with Messrs R. and W. Hawthorn of Newcastle-on-Tyne. Thereafter, in the employ of the West Hartlepool Steam Navigation Co., he gained some experience as a sea-going engineer for two years, and obtained a second-class Board of Trade certificate. Subsequently he was engaged for three years as foreman, superintending the erection of marine engines on shipboard for Messrs R. and W. Hawthorn; and then for about three years as outside manager of their works at Forth Banks, Newcastle-on-Tyne. In 1870 he started in business on his own account as a consulting engineer and marine surveyor in Newcastle. Later he was associated in partnership with Mr Charles Blagburn, and for a shorter term with Mr J. F. Spencer, in the firm of Menzies & Blagburn,, which was dissolved in 1888. He then practically continued the business by himself, until he took into partnership two members of his staff, Mr Stenhouse and Mr Wakinshaw. Although interested in engineering matters generally, he was more directly concerned with marine work, in connection with which he attained a leading position in Newcastle. For nearly thirty years he was consulted by the principal Tyneside shipowners in the construction and supervision of their machinery; and in recent years he acted to a considerable extent as surveyor of damage for London underwriters. He was a magistrate for the city of Newcastle. His death took place at his residence, Rannoch Lodge, Jesmond, Newcastle, on 18th August, 1898, at the age of fifty-eight.

He joined the Institution as a Member in 1881.

JAMES MURDOCH was born in Glasgow in 1821. At the age of fifteen years he left school and commenced an apprenticeship in the foundry of Messrs Murdoch, Aitken & Co., Glasgow, his father then being a partner in that firm. For some years Mr Murdoch was connected with the Lancefield Forge Company, Glasgow, as managing partner. In 1873 he entered into partnership with Mr Henry Murray of Port-Glasgow, where they together carried on the business of shipbuilding under the designation of Messrs Murdoch & Murray. He retired from active work in November, 1895, just three years prior to his death, which took place at his residence in Greenock on 11th October, 1898.

Mr Murdoch joined the Institution as a Member at its foundation in 1857.

JAMES TAIT was born at Castlehill, Carluke, in the year 1840, and received his education at the Coltness School under the late Mr Gavin Russell. After leaving school he was apprenticed to Mr Jonathan Hyslop, civil and mining engineer, Wishaw. His apprenticeship finished he proceeded to Glasgow to study mathematics, and civil engineering under Professor Rankine at Glasgow University. Having taken his degree as an engineer, he returned to Wishaw about 1867 and started business on his own account as a civil and mining engineer. Some time after he was appointed Burgh Engineer, which post he held until his death.

As Burgh Engineer Mr Tait played an important part in the development of Wishaw. He was concerned with three water schemes for the burgh, and he was also responsible for many of its sewage improvements. He will, however, be chiefly remembered for his work in connection with the new "Water Scheme" for the town, which engrossed his attention for a considerable time. Apart from his connection with Wishaw, he carried on an extensive business as a civil and mining engineer throughout Lanarkshire and in Ayrshire. He surveyed numerous mineral fields, and acted as engineer in connection with many water schemes. These last

included among others, water schemes for Crofthead, Dunoon, Carluke, Law, Carnwath, Kirkfieldbank, and West Calder.

Mr Tait died on the 15th January, 1899.

He joined the Institution as a Member in October, 1879.

JOHN WILSON was born at Port-Glasgow on 2nd October, 1848. He received his early professional training in the engine shop and drawing office of Messrs Blackwood & Gordon, Port-Glasgow. Thereafter he spent six years in South America, and on his return to this country was engaged in the drawing office of Messrs Cunliffe & Dunlop, Port-Glasgow, and later as a draughtsman with Messrs A. & J. Inglis, Glasgow. In 1885 he started in business on his own account as a consulting engineer.

Mr Wilson died on 26th July, 1898.

He joined the Institution as a Graduate in January, 1883, and was transferred to Membership in February, 1891.

Associate.

WILLIAM GRAY was born at Greenock on 2nd December, 1850, and early in life started work in a ship chandler's store in Glasgow. In 1876 he joined Mr Macbeth, who was then carrying on a ships' store business, and the new firm as Messrs Macbeth & Gray commenced business in Clyde Place, Glasgow. The partnership was most successful, and their ship chandlery and store business developed until it became one of the largest in the United Kingdom. Subsequently the firm became shipowners and owned and managed a large number of steamers.

Mr Gray was widely known, not only in Glasgow but in many shipping centres throughout the United Kingdom, as a capable and straightforward man of business. His death took place at White-

hall, Pollokshields, on 2nd May, 1899, the result of a fall from his horse while out riding the previous evening.

He joined the Institution as an Associate in January, 1899.

LIST OF HONORARY MEMBERS, MEMBERS, ASSOCIATES, AND GRADUATES

AT CLOSE OF SESSION 1898-99.

HONORARY MEMBERS.

	DATE OF ELECTION.
KELVIN, Lord, A.M., LL.D., D.C.L. F.R SS.L. and E., Professor of Natural Philosophy in the University of Glasgow,	1859
ARMSTRONG, Lord, C.B., LL.D., D.C.L., F.R.S., Newcastle-on-Tyne,	1884
BRASSEY, Lord, K.C.B., D.C.L., 4 Great George street, Westminster, London, S.W.,	1891
BLYTHSWOOD, Lord, Blythswood, Renfrewshire,	1891
KENNEDY, Professor A. B. W., LL.D., F.R.S., 17 Victoria street, London, S.W.,	1891
MURRAY, Sir DIGBY, Bart., Hothfield, Parkstone, Dorset,	1891
WHITE, Sir WILLIAM HENRY, K.C.B., F.R.S., LL.D., Admiralty, London,	1894
DURSTON Sir A. J., K.C.B., Admiralty, London,	1896
FROUDE, R. E., F.R.S., Admiralty Experiment works, Gosport,	1897

MEMBERS.

	DATE OF ELECTION.
AAMUNDSEN, JENS L., Houston Terrace, Renfrew,	24 Jan., 1899
ABERCROMBIE, ROBERT GRAHAM, Broad Street Engine Works, Alloa,	21 Mar., 1899
ADAM, J. MILLEN, Ibrox Iron works, Glasgow,	G. 25 Mar., 1890 M. 22 Jan., 1895
ADAMSON, JAMES, St. Quivox, Stopford road, Upton Manor, Essex,	23 Apr., 1889
AILSA *(The most Honourable the Marquis of)*, Shipbuilder, Culzean castle, Maybole,	25 Jan., 1898
AITCHISON, WILLIAM, 6 Midlothian drive, Shawlands, Glasgow,	22 Oct., 1889

Names marked thus * were Members of Scottish Shipbuilders' Association at Incorporation with Institution, 1865.

Names marked thus + are Life Members.

AITKEN, H. WALLACE, 140 Bath Street, Glasgow,	G. 24 Jan., 1888 M. 24 Jan., 1899
AITON, J. ARTHUR, 102 Fenchurch street, London, E.C.,	24 Nov., 1896
ALLAN, J. R., Bintang, Dumbreck, Glasgow,	25 Jan., 1888
ALLAN, JOHN M., 3 Grantly street, Shawlands, Glasgow,	21 Jan., 1890
ALLAN, ROBERT, Demerara foundry, George Town, Demerara,	30 Apr., 1895
ALLAN, ROBERT, Engineer and Shipbuilder, Singapore, S. Settlements,	26 Apr., 1898
ALLAN, WILLIAM, M.P., Scotia Engine works, Sunderland,	20 Jan., 1869
ALLEY, STEPHEN E., Engineer, Langside house, Langside, Glasgow,	23 Nov., 1897
†ALLIOTT, JAMES B., The Park, Nottingham,	21 Dec., 1864
ALSTON, WILLIAM M., 24 Sardinia terrace, Hillhead, Glasgow,	G. 15 Feb., 1865 M. 18 Dec., 1877
†AMOS, ALEXANDER, Public Library of N.S.W., Sydney, New South Wales,	21 Dec., 1896
†AMOS, ALEXANDER, Jun.,	21 Dec., 1896
†ANDERSON, E. ANDREW, c/o Clinton, 13 Holmhead street, Glasgow,	21 Feb., 1899
ANDERSON, JAMES, 100 Clyde street, Glasgow,	G. 24 Feb., 1874 M. 23 Nov., 1880
ANDERSON, JAMES H., Caledonian Railway, Glasgow,	20 Dec., 1892
ANDERSON, ROBERT, Clyde Street, Renfrew,	26 Jan., 1897
ANDREWS, JAMES, Holm Foundry, Cathcart,	22 Nov., 1898
ANIS, Professor MOHAMED, Bey, Ministère des Travaux Publics, Cairo,	24 Apr., 1894
ANGUS, ROBERT, Lugar, Ayrshire,	28 Nov., 1860
ARCHER, W. DAVID, 47 Croham road, Croyden, Surrey,	20 Dec., 1887
ARCHIBALD, HENRY, The Parkhead Steel Foundry Co., Glasgow,	25 Oct., 1898
ARNOT, WILLIAM, 79 West Regent street, Glasgow,	23 Jan., 1894
ARROL, THOMAS A., Germiston works, Glasgow,	21 Dec., 1875
ARROL, THOMAS, Jun., Oswald gardens, Scotstounhill, Glasgow,	20 Nov., 1894
†ARROL, Sir WILLIAM, LL.D., M.P., Dalmarnock Iron works, Glasgow,	27 Jan., 1885
AULD, JOHN, Whitevale foundry, Glasgow,	28 Apr., 1885
AUSTIN, WM. R., 3 Caird drive, Partickhill, Glasgow,	23 Feb., 1897
BAIN, WILLIAM N., 40 St. Enoch square, Glasgow,	24 Feb., 1880
BAIN, WILLIAM P. C., Lochrin Iron works, Coatbridge,	26 Apr., 1891
BAIRD, ALLAN W., Eastwood villa, St. Andrew's drive, Pollokshields, Glasgow,	25 Oct., 1881

BALDERSTON, JAMES, Anchor mills, Paisley,	25 Jan., 1898
BALFOUR, GEORGE, 377 Paisley road, West, Glasgow,	21 Mar., 1899
BALLINGALL, DAVID, 340 Maxwell road, Pollokshields, Glasgow,	27 Oct., 1896
BAMFORD, HARRY, M.Sc., The University, Glasgow,	24 Nov., 1896
BARCLAY, GEORGE, Vulcan works, Paisley,	25 Jan., 1898
BARNETT, J. R., Lilybank, Johnstone,	22 Dec., 1896
BARNETT, MICHAEL R., Engineer's Office, Reservoir works, Cray, near Swansea,	22 Nov., 1887
BARR, Professor ARCHIBALD, D.Sc., Royston, Dowanhill, Glasgow,	21 Mar., 1882
BARR, JOHN, Glenfield Company, Kilmarnock,	A. 28 Oct., 1883 M. 25 Jan., 1898
BAXTER, GEORGE H., Clyde Navigation works, Dalmuir,	22 Mar., 1881
BAXTER, P., M'L., Copland works, Govan,	G. 22 Dec., 1885 M. 15 June, 1898
BEARDMORE, JOSEPH, Parkhead forge, Glasgow,	27 Oct., 1896
BEARDMORE, JOSEPH GEORGE, Parkhead Forge, Glasgow,	22 Nov., 1898
BEARDMORE, WILLIAM, Parkhead forge, Glasgow,	27 Oct., 1896
BEGBIE, WILLIAM, P.O. Box 459, Johannesburg, South Africa,	15 June, 1898
BELL, CHARLES, The Birches, Stirling,	26 Jan., 1875
*†BELL, DAVID, 19 Eton place, Hillhead, Glasgow,	
BELL, IMRIE, 49 Dingwall road, Croyden, Surrey,	23 Mar., 1880
BELL, STUART, 65 Bath street, Glasgow,	26 Feb., 1895
BELL, THOMAS, 7 Clydeview, Partick,	G. 26 Apr., 1887 M. 27 Apr., 1897
BELL, W. REID, Box 191, Lourenço Marques, Delagoa Bay, South Africa,	22 Jan., 1889
BENNIE, H. OSBOURNE, Clyde Engine works, Polmadie, Glasgow,	25 Jan., 1898
BENNIE, JOHN, Auldhousfield, Eastwood, Pollokshaws,	22 Feb., 1898
BEVERIDGE, RICHARD JAMES, 53 Waring street, Belfast,	22 Feb., 1898
BIGGART, ANDREW S., 279 Nithsdale road, Pollokshields, Glasgow,	G. 20 Mar., 1883 M. 25 Nov., 1884
BILES, Professor JOHN HARVARD, Glasgow University, Glasgow,	25 Mar., 1884
BINNEY, WM. H., Marine Superintendent, Holyhead,	26 Jan., 1897
BIRD, JOHN R., 10 Morrison street, Glasgow,	25 Mar., 1890
BISHOP, ALEXANDER, 3 Germiston street, Glasgow,	G. 24 Mar., 1885 M. 24 Jan., 1899
BLACK, DAVID, 12 Huntly terrace, Shettleston,	22 Mar., 1898

BLAIR, DAVID A., Scotland street Copper works, Glasgow,	23 Mar., 1897
BLAIR, GEO., Jun., 38 Queen street, Glasgow,	G. 22 Jan., 1884 M. 23 Feb., 1897
BLAIR, GEORGE M'L., 129 Trongate, Glasgow,	17 Feb., 1869
BLAIR, H. MACLELLAN, Sentinel works, Polmadie, Glasgow,	G. 22 Jan., 1884 M. 22 Oct., 1889
BLAIR, JAMES M., Williamcraigs, Linlithgowshire,	27 Mar., 1867
BONE, WILLIAM L., Ant and Bee works, West Gorton, Manchester,	23 Oct., 1883
BORROWMAN, WILLIAM C., Newstead, West Hartlepool,	G. 27 Oct., 1885 M. 26 Oct., 1897
BOST, W. D. ASHTON, Adelphi house, Paisley,	25 Jan., 1898
BOW, WILLIAM, Thistle works, Paisley,	27 Jan., 1891
BOWDEN, GEORGE HARLAND, 53 Bothwell street, Glasgow,	21 Feb., 1899
BOWSER, CHARLES HOWARD, Charles street, St. Rollox, Glasgow,	21 Mar., 1899
BOWSER, HOWARD, 13 Royal crescent, West, Glasgow,	27 Jan., 1874
BRACE, GEORGE R., 25 Water street, Liverpool,	25 Mar., 1890
BRAY, E. N., 81 St. George's place, Glasgow,	22 Nov., 1898
BRIER, HENRY, 1 Miskin road, Dartford, Kent,	22 Dec., 1891
BROADFOOT, JAMES, Lymehurst, Jordanhill,	G. 23 Dec., 1873 M. 22 Jan., 1884
BROADFOOT, WILLIAM R., Inchholm works, Whiteinch,	25 Jan., 1898
BROCK, HENRY W., Engine works, Dumbarton,	30 Apr., 1895
*BROCK, WALTER, Engine works, Dumbarton,	26 Apr., 1865
BROCK, WALTER, Jun., Levenford, Dumbarton,	27 Oct., 1896
BROOM, THOMAS M., Oakfield, East Greenock,	25 Apr., 1893
BROWN, ALEX. D., Dry Dock, St John's, Newfoundland,	22 Dec., 1896
BROWN, ALEXANDER T., 18 Glencairn drive, Pollokshields, Glasgow,	G. 25 Feb., 1879 M. 27 Oct., 1891
*BROWN, ANDREW, London works, Renfrew,	16 Feb., 1859
BROWN, ANDREW M'N., Strathclyde, Dalkeith avenue, Dumbreck, Glasgow,	G. 25 Jan., 1876 M. 24 Nov., 1885
BROWN, EBENEZER HALL-, Helen street, Engine works, Govan, Glasgow,	G. 18 Dec., 1883 M. 26 Feb., 1895
BROWN, GEORGE, Kirklee, Dumbarton,	23 Mar., 1886
BROWN, JAMES, Engine Department, Astilleros del Nervión, Bilbao, Spain,	G. 26 Oct., 1886 M. 26 Jan., 1892
BROWN, JAMES M'N., Glenfruin, Renfrew,	26 Jan., 1897
BROWN, MATTHEW T., B.Sc., 233 St. Vincent street, Glasgow,	G. 25 Jan., 1881 M. 18 Dec., 1894
BROWN, WALTER, Monkdyke, Renfrew,	28 Apr., 1885

BROWN, WILLIAM, Meadowflat, Renfrew,	G. 27 Jan., 1874 M. 22 Jan., 1884
BROWN, WILLIAM, Albion works, Woodville street, Govan, Glasgow,	21 Dec., 1880
BROWN, WILLIAM, Messrs Dubs & Co., Glasgow Locomotive works, Glasgow,	17 Dec., 1889
BROWN, WILLIAM DEWAR, 22 Ranelagh villas, Hove, Sussex,	25 Mar., 1890
BROWN, WILLIAM S., Jr., 67 Washington street, Glasgow,	21 Dec., 1897
BRUCE-KINGSMILL, J., Capt., R.A., Newton house, Newton,	21 Dec., 1897
BRUHN, JOHANNES, 49 Sydenham park, Sydenham, London, S.E.,	G. 24 Oct., 1893 M. 22 Feb., 1898
BRYSON, WILLIAM ALEXANDER, Burgh Electrical Engineer's Department, Town Hall, Leith,	27 Oct., 1896
BUCKWELL, GEORGE W., Board of Trade Office, Custom House arcade, Liverpool,	27 Apr., 1897
BUDENBERG, CHRISTIAN FREDERICK, 31 Whitworth street, Manchester,	20 Dec., 1898
BURNS, JAMES W., 19 Clifford street, Glasgow,	21 Dec., 1880
BURT, THOMAS, 60 St. Vincent crescent, Glasgow,	22 Mar., 1881
CAIRD, ARTHUR, Messrs Caird & Co., Ltd., Greenock,	27 Oct., 1896
CAIRD, EDWARD B., 777 Commercial road, Limehouse, London,	29 Oct., 1878
†CAIRD, PATRICK T., Messrs Caird & Co., Ltd., Greenock,	27 Oct., 1896
CAIRD, ROBERT, Messrs Caird & Co., Ltd., Greenock,	20 Feb., 1894
CALDWELL, JAMES, 130 Elliot street, Glasgow,	17 Dec., 1878
CALDERWOOD, WILLIAM T., Stanley villa, Kilmailing, Cathcart,	25 Jan., 1898
CAMERON, DONALD, City Surveyor's office, Exeter,	25 Feb., 1890
CAMERON, J. C., 24 Pollok street, Glasgow,	21 Dec., 1875
CAMERON, JOHN B., 111 Union street, Glasgow,	24 Mar., 1885
CAMERON, WILLIAM, 6 Gordon terrace, Shettleston,	25 Mar., 1890
CAMPBELL, GEORGE, Albany villa, Arrell lane, Aintree, Liverpool,	22 Mar., 1898
CAMPBELL, JOHN, Post Office, Vladivostock,	21 Jan., 1890
CAMPBELL, JOSEPH C., 1 University place, Partick, Glasgow,	27 Oct., 1896
CAMPBELL, W. S., 1 Thornwood terrace, Partick, Glasgow,	26 Mar., 1895
CAMPBELL, WALTER HOPE, 42 Krestchatik, Kieff, South Russia,	25 Apr., 1899
CAREY, EVELYN G., 4 Sunnyside avenue, Uddingston,	22 Oct., 1889
CARLAW, ALEX. L., 11 Finnieston street, Glasgow,	24 Dec., 1895

CARLAW, DAVID, Jun., 11 Finnieston street, Glasgow,	24 Dec., 1895
CARLAW, JAMES W., 11 Finnieston street, Glasgow,	24 Dec., 1895
CARRUTHERS, JOHN H., Ashton, Queen Mary avenue, Crosshill, Glasgow,	22 Nov., 1881
CARSWELL, THOS. P., 1 Queen's terrace, Ayr,	27 Oct., 1896
CHALK, JAMES, 68 Bath street, Glasgow,	23 Feb., 1892
CHAMEN, W. A., 75 Waterloo street, Glasgow,	22 Feb., 1898
CHARLTON, W. A., 96 Hope street, Glasgow,	23 Jan., 1894
CHRISTIE, JOHN, 75 Waterloo street, Glasgow,	22 Nov., 1898
CHRISTIE, R. BARCLAY, Messrs M'Lay & M'Intyre, 21 Bothwell street, Glasgow,	25 Apr., 1893
CHRISTISON, GEORGE, 13 Cambridge drive, Glasgow,	22 Feb., 1898
CLARK, GEORGE ALEXANDER, 182 West George street, Glasgow,	22 Nov., 1898
CLARK, JAMES LESTER, 102 Fenchurch street, London, E.C.,	24 Nov., 1896
CLARK, JOHN, British India Steam Navigation Co., 9 Throgmorton avenue, London, E.C.,	23 Jan., 1883
CLARK, WILLIAM, 208 St. Vincent street, Glasgow,	25 Apr., 1893
CLARK, WILLIAM, 88 Renfield street, Glasgow,	22 Dec., 1896
CLARK, WILLIAM GRAHAM, 27 Lawton road, Waterloo, Liverpool,	22 Feb., 1898
CLARKSON, CHARLES, Green lane, Chester road, Erdington, Birmingham,	27 Oct., 1891
CLEGHORN, ALEXANDER, Datcha, Scotstounhill, Glasgow,	22 Nov., 1892
COATS, JAMES, Talara, Katharine drive, Govan,	21 Dec., 1897
COCHRAN, JAMES T., Messrs Cochran & Co., Shipbuilders, Birkenhead,	26 Feb., 1884
COCHRANE, JOHN, Grahamston foundry, Barrhead,	25 Mar., 1890
COCKBURN, GEORGE, 24 Sussex street, Glasgow,	25 Oct., 1881
COCKBURN, ROBERT, Cumbrae House, Dumbreck, Glasgow,	25 Jan., 1898
COLLIE, CHARLES, 19-21 Eaglesham street, Plantation, Glasgow,	26 Apr., 1898
COLVILLE, ARCHIBALD, Motherwell,	27 Oct., 1896
COLVILLE, DAVID, Jun., Jerviston house, Motherwell,	27 Oct., 1896
CONNELL, CHARLES, Whiteinch, Glasgow,	G. 19 Dec., 1876 M. 25 Mar., 1884
CONNER, ALEXANDER, 41 Thornwood drive, Partick.	G. 26 Feb., 1884 M. 24 Jan., 1899
CONNER, BENJAMIN, 196 St. Vincent street, Glasgow,	G. 22 Dec., 1885 M. 26 Oct., 1897
CONNER, JAMES, Assistant Locomotive Engineer, Highland Railway, Inverness,	G 18 Dec., 1877 M. 24 Nov., 1885

COOPER, JAMES, Aberdeen Steam Navigation Company, Aberdeen,	19 Dec., 1893
COPELAND, JAMES, 24 George square, Glasgow,	17 Feb., 1864
COPESTAKE, S. G. G., Glasgow Locomotive works, Little Govan, Glasgow,	11 Mar., 1868
†COPLAND, WILLIAM R., 146 W. Regent street, Glasgow,	20 Jan., 1864
CORMACK, JOHN DEWAR, B.Sc., The University, Glasgow,	24 Nov., 1896
COULSON, W. ARTHUR, 47 King street, Mile-end, Glasgow,	15 June, 1898
COUPER, SINCLAIR, Moore Park Boiler works, Govan, Glasgow,	G. 21 Dec., 1880 M. 27 Oct., 1891
COURTIER-DUTTON, W. T., Shipbuilder and Engineer, 69 St. Vincent street, Glasgow,	22 Dec., 1896
COUTTS, FRANCIS, 25 Roslin Terrace, Aberdeen.	G. 27 Oct., 1885 M. 24 Jan., 1899
COWAN, JOHN, Ingleholme, Greenock,	27 Apr., 1897
COWAN, M'TAGGART, 109 Bath street, Glasgow,	28 Nov., 1866
CRAIG, ARCHIBALD FULTON, Dykebar house, Paisley,	25 Jan., 1898
CRAIG, JAMES, Lloyds Registry, 342 Argyle street, Glasgow,	G. 20 Dec., 1892 M. 21 Dec., 1897
CRAIG, JOHN, Rosevale, Port-Glasgow,	26 Mar., 1895
CRAWFORD, JAMES, 30 Ardgowan street, Greenock,	27 Oct., 1896
CRAWFORD, SAMUEL, Messrs John Scott & Company, Engineers and Shipbuilders, Kinghorn,	18 Dec., 1883
CRICHTON, JAMES L., 3 East Park terrace, Maryhill, Glasgow,	18 Dec., 1894
CROCKATT, WILLIAM, 179 Nithsdale road, Pollokshields, Glasgow,	22 Mar., 1881
CROSHER, JOHN, 87 Portman street, Kinning Park, Glasgow,	24 Jan., 1899
CROSHER, WILLIAM, 31 Great Wellington street, Kinning Park, Glasgow,	24 Jan., 1899
CROW, JOHN, Engineer, 236 Nithsdale road, Pollokshields, Glasgow,	25 Jan., 1898
CRUICKSHANK, J. E., 157 Hope street, Glasgow,	24 Jan., 1899
CUMMING, WM. J. L., Motherwell Bridge Co., Motherwell,	24 Jan., 1899
CUNNINGHAM, PETER N., Easter house, Kennyhill, Cumbernauld road, Glasgow,	23 Dec., 1884
CURRIE, JAMES, 16 Bernard street, Leith,	20 Jan., 1869
CUTHILL, WILLIAM, Beechwood, Uddingston,	24 Nov., 1896
DANIELS, THOMAS, Messrs Nasmyth, Wilson & Company, Ltd., Patricroft, near Manchester,	25 Apr., 1893

DARROCH, JOHN, 27 South Kinning place,	24 Jan., 1899
DAVIDSON, DAVID, 17 Regent Park square, Strathbungo, Glasgow,	G. 22 Mar., 1881 M. 18 Dec., 1888
DAVISON, THOMAS, 248 Bath street, Glasgow,	11 Dec., 1861
DEAS, JAMES, Engineer, Clyde Trust, Crown gardens, Glasgow,	17 Feb., 1869
DEMPSTER, JAMES, 7 Knowe terrace, Pollokshields,	24 Jan., 1899
DEMPSTER, JOHN, 49 Robertson street, Glasgow,	22 Feb., 1898
DENHOLM, JAMES, 5 Derby terrace, Sandyford street, Glasgow,	21 Nov., 1883
DENHOLM, WILLIAM, Meadowside Shipbuilding yard, Partick, Glasgow,	G. 18 Dec., 1883 M. 21 Nov., 1893
DENNY, ARCHIBALD, Braehead, Dumbarton,	21 Feb., 1888
DENNY, JAMES, Engine works, Dumbarton,	25 Oct., 1887
DENNY, Col. JOHN M., M.P., Garmoyle, Dumbarton,	27 Oct., 1894
DENNY, LESLIE, Leven Shipyard, Dumbarton,	30 Apr., 1895
DENNY, PETER, Bellfield, Dumbarton,	21 Feb., 1888
DICK, FRANK W., Palmer's Steel works, Jarrow-on-Tyne,	19 Mar., 1878
DICKSON, B. GILLESPIE, c/o J. T. Sellar, 8 Blackfriars street, Perth,	19 Nov., 1890
DICKSON, WILLIAM, Lanarkshire Steel Co., Motherwell,	15 June, 1898
DIMMOCK, JOHN WINGRAVE, 2 Grantly gardens, Shawlands, Glasgow,	22 Mar., 1898
DIXON, JAMES S., 127 St. Vincent street, Glasgow,	G. 24 Dec., 1873 M. 22 Jan., 1878
DIXON, WALTER, 59 Bath street, Glasgow,	26 Feb., 1895
DIXON, WILLIAM, H., 59 Bath street, Glasgow,	A. 15 June, 1898 M. 25 Oct., 1898
DOBSON, WILLIAM, The Chesters, Jesmond, Newcastle-on-Tyne,	17 Jan., 1871
DONALD, B. B., 275 Onslow drive, Dennistoun, Glasgow,	G. 20 Mar., 1888 M. 24 Jan., 1899
DONALD, DAVID P., Johnstone,	21 Mar., 1899
DONALD, JAMES, Abbey works, Paisley,	20 Jan., 1864
DONALD, ROBERT HANNA, Abbey works, Paisley,	22 Nov., 1892
DONALDSON, JAMES, Almond villa, Renfrew,	25 Jan., 1876
DOYLE, PATRICK, F.R.S.E., 7 Government place, Calcutta, India,	23 Nov., 1886
DREW, ALEXANDER, 22 Rutland square, Edinburgh,	29 Apr., 1890
DRUMMOND, WALTER, The Glasgow Railway Engineering works, Govan, Glasgow,	26 Mar., 1895
DRYSDALE, JOHN W. W., 37 Westercraigs, Dennistoun, Glasgow,	23 Dec., 1884

DUBS, CHARLES R., Glasgow Locomotive works, Glasgow, 24 Oct., 1882

DUNCAN, GEORGE F., Ardenclutha, Port-Glasgow, G. 23 Nov., 1886; M. 20 Mar., 1894

DUNCAN, HUGH, London road Iron works, Glasgow, 15 June, 1898

DUNCAN, JOHN, Ardenclutha, Port-Glasgow, 23 Nov., 1886

DUNCAN, ROBERT, Whitefield Engine works, Govan, Glasgow, 25 Jan., 1881

DUNLOP, DAVID JOHN, Inch works, Port-Glasgow, 23 Nov., 1869

DUNLOP, JOHN G., Clydebank, Dumbartonshire, 23 Jan., 1877

DUNLOP, WILLIAM, N. Odero fer Alesso, Sestri Ponento, Italy, G. 22 Jan., 1884; M. 24 Jan., 1899

†DUNN, PETER L., 815 Battery street, San Francisco, U.S.A., 26 Oct., 1886

DYER, HENRY, D. Sc., M. A., 8 Highburgh terrace, Dowanhill, Glasgow, 23 Oct., 1883

EASTON, WM. CECIL, B.Sc., City Engineer's Office, Glasgow, 22 Feb., 1898

EDWARDS, CHARLES, 41 Westbourne gardens, Glasgow, 26 Oct., 1897

ELGAR, FRANCIS, LL.D., F.R.S.S., L.& E., Fairfield Shipbuilding and Engineering Co., Limited, 113 Cannon street, London, E.C., 24 Feb., 1885

ELLIOTT, ROBERT, B.Sc., Lloyd's Surveyor, Greenock, G. 24 Mar., 1885; M. 21 Feb., 1898

ELSEE, THOMAS, Mensagerias Fluviales del Plata, Uruguay, 28 Jan., 1896

EVANS, MALCOLM T., 3 Ashville, Skegoniel avenue, Belfast, 23 Feb., 1897

EWEN, PETER, The Barrowfield Ironworks, Ltd., Craigielea, Bothwell, 21 Mar., 1899

FAIRWEATHER, WALLACE, 62 St. Vincent street, Glasgow, 24 Apr., 1894

FEDDEN, SAMUEL EDGAR, Municipal Buildings, Greenock, 21 Mar., 1899

FERGUSON, DANIEL, 27 Oswald street, Glasgow, 26 Apr., 1898

FERGUSON, J. STRATHEARN, 19 Arundel drive, Langside, Glasgow, 23 Nov., 1897

FERGUSON, JOHN, Shipbuilder, Leith, G. 23 Nov., 1869; M. 19 Mar., 1878

FERGUSON, JOHN JAMES, Ardendarroch, Ardnadam, 24 Jan., 1899

FERGUSON, PETER, Phœnix works, Paisley, 22 Oct., 1889

FERGUSON, WILFRED H., 4 Thornwood terrace, Partick, 22 Nov., 1898

FERGUSON, WILLIAM D., Albert villa, Ravenhill road, Belfast, {G. 27 Jan., 1885 / M. 20 Mar., 1894}

FERGUSON, WILLIAM R., Barclay Curle & Co., Ltd., Whiteinch, Glasgow, {G. 22 Feb., 1881 / M. 22 Jan., 1895}

FERRIER, JAMES, China Merchants Steam Nav. Co., Shanghai, 22 Dec., 1896

FIELDEN, IMMER, 2 Thornton villas, Holderness road, Hull, 24 Feb., 1874

FINDLAY, ALEXANDER, Parkneuk Iron works, Motherwell, 27 Jan., 1880

FINLAYSON, FINLAY, Clydeside Tube works, Whifflet, Coatbridge, 23 Dec., 1884

FISHER, ANDREW, St. Mirren's Engine works, Paisley, 25 Jan., 1898

FLEMING, ANDREW E., Kandy, Ceylon, 23 Jan., 1894

FLEMING, GEORGE E., 4 Doune quadrant, Kelvinside, Glasgow, 27 Oct., 1896

FLEMING, JOHN, Dellburn works, Motherwell, 24 Jan., 1899

FLEMING, WILLIAM, 10 Heathfield terrace, Springburn, Glasgow, 25 Jan., 1898

FLETCHER, JAMES, 11 Ibrox Place, Whitefield road, Govan, {G. 28 Jan., 1896 / M. 23 Nov., 1897}

FLETT, GEORGE L., 86 Sussex street, Paisley road, West, Glasgow, 22 Jan., 1895

FORSYTH, LAWSON, 10 Grafton square, Glasgow, 18 Dec., 1883

FOSTER, JAMES, 11 St. Andrew's drive, Pollokshields, Glasgow, 26 Jan., 1897

FOULIS, WILLIAM, City Chambers, John Street, Glasgow, 18 Jan., 1870

FOX, SAMSON, Blairquhan Castle, Maybole, 2 Nov., 1880

FRAME, JAMES, 6 Kilmailing terrace, Cathcart, Glasgow, 23 Feb., 1897

FRASER, WILLIAM, 121 North Montrose street, Glasgow, 19 Dec., 1893

FRYER, TOM J., 20-22 Change Alley, Sheffield, {G. 18 Dec., 1894 / M. 20 Dec., 1898}

FUJII, JERUGORS, 8 Sutherland terrace, Dowanhill, Glasgow, 21 Feb., 1899

FULLERTON, ALEX., Vulcan Works, Paisley, 22 Dec., 1896

GALE, EDMUND WILLIAM, 4 Rosebery place, Clydebank, 23 Nov., 1897

†GALE, JAS. M., Corporation Water works, City Chambers, Glasgow, 24 Nov., 1858

GALE, WILLIAM M., 18 Huntly gardens, Kelvinside, Glasgow, 24 Jan., 1893

GALLOWAY, CHARLES S., Greenwood City, Vancouver, B.C.,	22 Jan., 1895
GARDNER, WALTER, 8 Percy street, Ibrox, Glasgow,	20 Dec., 1898
GEARING, ERNEST, Fenshurst, Clarence drive, Harrogate,	20 Mar., 1888
GEMMELL, E. W., Board of Trade Offices, 7 York street, Glasgow,	18 Dec., 1888
GIBB, ANDREW, 30 South street, Greenwich, London, S.E.,	G. 23 Dec., 1873 M. 21 Mar., 1882
GIFFORD, PATERSON, 101 St. Vincent street, Glasgow,	23 Nov., 1886
*GILCHRIST, ARCHIBALD, 5 Montgomerie cres., Glasgow,	23 Nov., 1859
GILCHRIST, JAMES, Stobcross Engine works, Finnieston quay, Glasgow,	G. 26 Dec., 1866 M. 29 Oct., 1878
GILLESPIE, ANDREW, 34 St. Enoch square, Glasgow,	20 Nov., 1894
GILLESPIE, JAMES, 21 Minerva street, Glasgow,	G. 24 Feb., 1874 M. 24 Mar., 1891
GLASGOW, JAMES, Fernlea, Paisley,	25 Jan., 1898
GLEN, D. C., Messrs Matheson & Company, 3 Lombard street, London, E.C.,	G. 23 Dec., 1884 M. 21 Feb., 1893
†GOODWIN, GILBERT S., Alexandra buildings, James street, Liverpool,	28 Mar., 1866
GORDON, JOHN, 152 Craigpark street, Glasgow,	26 Mar., 1895
GORRIE, JAMES M., 9 Park drive, Whiteinch,	22 Nov., 1898
GOURLAY, H. GARRET, Dundee foundry, Dundee,	25 Apr., 1882
GOWAN, A. B., Messrs Vickers, Son & Maxim, Barrow-in-Furness,	G. 24 Jan., 1882 M. 22 Jan., 1895
GRACIE, ALEX., Fairfield Shipbuilding and Engineering Company, Govan,	G. 26 Feb., 1884 M. 24 Nov., 1896
GRAHAM, DAVID R., Messrs A. Stephen & Sons, Engine Department, Linthouse, Glasgow,	25 Apr., 1893
GRAHAM, JOHN, 60 Cambridge drive, Kelvinside, Glasgow,	25 Jan., 1898
GRAHAM, WALTER, Kilblain Engine works, Nicholson street, Greenock,	G. 28 Jan., 1896 M. 15 June, 1898
GRANT, THOMAS M., 322 St. Vincent street, Glasgow,	25 Jan., 1876
GRAY, JAMES, Riverside, Old Cumnock, Ayrshire,	8 Jan., 1862
GRAY, WILLIAM, 2 Veir terrace, Dumbarton,	23 Feb., 1897
GRETCHIN, G. L., c/o M. Krapivine, Ekaterininska street, Odessa, Russia,	25 Jan., 1898
GRIEVE, JOHN, Engineer, Motherwell,	25 Jan., 1898
GROVES, L. JOHN, Engineer, Crinan Canal, Ardrishaig,	20 Dec., 1881
GUTHRIE, JOHN, The Crown Iron works, Glasgow,	27 Oct., 1896

HAIGH, WILLIAM R., 15 Randolph gardens, Partick, Glasgow,	22 Dec., 1896
HALKET, JAMES P., Glengall Iron works, Millwall, London, E.,	26 Oct., 1897
HALL, WILLIAM, Shipbuilder, Aberdeen,	25 Jan., 1881
HALLEY, WILLIAM LIZARS, Lennoxlea, Dumbarton,	21 Dec., 1897
HAMILTON, ARCHIBALD, New Dock works, Govan, Glasgow,	G. 24 Feb., 1874 M. 24 Nov., 1885
HAMILTON, CLAUD, 247 St. Vincent street, Glasgow,	15 June, 1898
HAMILTON, DAVID C., Clyde Shipping Company, 21 Carlton place, Glasgow,	G. 23 Dec., 1873 M. 22 Nov., 1881
HAMILTON, JAMES, Messrs R. Napier & Sons, Govan, Glasgow,	G. 26 Dec., 1863 M. 18 Mar., 1876
*HAMILTON, JOHN, 22 Athole gardens, Glasgow,	
HAMILTON, W. D., 116 St. Vincent street, Glasgow,	21 Mar., 1899
HARMAN, BRUCE, 35 Connaught road, Harlenden, London, N.W.,	G. 2 Nov., 1880 M. 22 Jan., 1884
HARRISON, J. E., 160 Hope street, Glasgow,	G. 26 Feb., 1889 M. 22 Feb., 1898
HART, P. CAMPBELL, John Finnie street, Kilmarnock,	24 Nov., 1896
HARVEY, JAMES, 224 West street, Glasgow,	24 Jan., 1899
HARVEY, JOHN H., Benclutha, Port-Glasgow,	22 Feb., 1887
HARVEY, ROBERT, 224 West street, Glasgow,	24 Nov., 1896
HASTIE, WILLIAM, Kilblain Engine works, Greenock,	17 Jan., 1871
HAYWARD, THOMAS ANDREW, 18 Carrington street, Glasgow,	22 Mar., 1898
†HENDERSON, A. P., 30 Lancefield quay, Glasgow,	25 Nov., 1879
HENDERSON, FREDERICK N., Meadowside, Partick, Glasgow,	26 Mar., 1895
HENDERSON, J. BAILIE, Government Hydraulic Engineer, Brisbane, Queensland,	18 Dec., 1888
†HENDERSON, JOHN, Meadowside, Partick, Glasgow,	21 Jan., 1873
†HENDERSON, JOHN L.,	25 Nov., 1879
HENDERSON, WILLIAM STEWART, 6 Radnor st., Sandyford, Glasgow,	24 Nov., 1896
HERRIOT, GEORGE, Board of Trade Offices, 7 York street, Glasgow,	20 Feb., 1877
HERRIOT, W. SCOTT, 11 Rosehill Street, Derby,	28 Oct., 1890
HETHERINGTON, EDWARD P., Messrs John Hetherington & Co, Ltd., Pollard street, Manchester,	22 Nov., 1892
HIDE, WILLIAM SEYMOUR, Messrs. Amos & Smith, Albert Dock works, Hull,	18 Dec., 1888

HILL, THOMAS, 3 Whitevale, Dennistoun, Glasgow,	22 Jan., 1895
HINES, JAMES, Dunedin lodge, Lenzie, Glasgow,	28 Jan., 1896
HODGART, JOHN, Lumsburn, Paisley,	22 Dec., 1896
HOGG, CHARLES P., 53 Bothwell street, Glasgow,	2 Nov., 1880
HOGG, JOHN, Victoria Engine works, Airdrie,	20 Mar., 1883
HOLMES, F. G., Burgh Chambers, Govan,	23 Mar., 1880
HOLMES, MATTHEW, Netherby, Lenzie,	20 Mar., 1883
HOLMS, A. CAMPBELL, Lloyd's Register, 2 White Lion court, Cornhill, London,	24 Apr., 1894
HOMAN, WILLIAM M'L., Orange Free State Railways, Kroonstad, Orange Free State, South Africa,	G. 26 Jan., 1892 M. 26 Oct., 1897
HOME, HENRY, 8 Sardinia terrace, Hillhead, Glasgow,	23 Feb., 1897
HORNE, GEORGE S., 18 Berkeley terrace, Glasgow,	21 Feb., 1899
HORNE, JOHN, Rokeby villa, Carlisle,	23 Nov., 1897
†HOUSTON, COLIN, Harbour Engine works, 60 Portman street, Glasgow,	25 Mar., 1890
HOUSTON, JAMES, Jr., Brisbane house, Bellahouston,	25 Jan., 1898
HOWAT, WILLIAM, 121 Raeberry street, Glasgow,	22 Feb., 1898
†HOWDEN, JAMES, 195 Scotland street, Glasgow,	Original
HUME, JAMES HOWDEN, 195 Scotland street, Glasgow,	22 Dec., 1891
*†HUNT, EDMUND, 121 West George street, Glasgow,	Original
HUNTER, GILBERT M., New Yards, Maybole, N.B.,	G. 26 Oct., 1886 M. 19 Nov., 1889
HUNTER, JAMES, Aberdeen Iron works, Aberdeen,	25 Jan., 1881
HUNTER, JOHN, Sir Wm. Arrol & Co., Ltd., Dalmarnock Iron Works, Glasgow,	A. 22 Jan., 1895 M. 21 Mar. 1899
HUNTER, JOSEPH GILBERT, Lloyd's Register, 12 Oriel chambers, Liverpool,	24 Feb., 1891
HUTCHESON, ARCH., 37 Mair street, Plantation, Glasgow,	22 Dec., 1896
HUTCHESON, JOHN, 37 Mair street, Plantation, Glasgow,	22 Mar., 1898
HUTCHISON, JAMES H., Shipbuilder, Port-Glasgow,	26 Mar., 1895
HUTSON, GUYBON, Kelvinhaugh Engine works, Glasgow,	G. 23 Dec., 1873 M. 24 Nov., 1885
HUTSON, GUYBON, Jun., 3 Bute mansions, Glasgow,	21 Mar., 1893
†INGLIS, JOHN, LL.D., Point House Shipyard, Glasgow,	1 May, 1861
IRELAND, WILLIAM, 7 Ardgowan terrace, Glasgow,	25 Feb., 1890
JACK, ALEXANDER, 164 Windmillhill, Motherwell,	21 Nov., 1893
JACK, JAMES R., Mavisbank, Dumbarton,	27 Apr., 1897

JACKSON, HAROLD D., 10 Hillend gardens, Hyndland road, Glasgow, { G. 24 Mar., 1891 / M. 20 Dec., 1898 }

JACKSON, PETER, 109 Hope street, Glasgow, 24 Mar., 1891

JACKSON, WILLIAM, Govan Engine works, Govan, Glasgow, 21 Dec., 1875

JAMIESON, Professor ANDREW, F.R.S.E., 16 Rosslyn terrace, Hillhead, Glasgow, 26 Mar., 1889

JARDINE, JOHN, Fairholm, Motherwell, 26 April, 1898

JOHNSTON, DAVID, 9 Osborne terrace, Copland road, Glasgow, 25 Feb., 1879

JOHNSTON, ROBERT, Kirklee, Wallace street, Kilmarnock, 22 Mar., 1898

JOHNSTONE, GEORGE, Messrs Mackinnon, Mackenzie & Co., Calcutta, 21 Mar., 1899

JONES, LLEWELLEN, Chesterfield house, 98 Great Tower street, London, E.C., 25 Oct., 1892

KELLY, ALEXANDER, 100 Hyde Park street, Glasgow, 23 Feb., 1897

KEMP, DANIEL, 69 Prince Edward street, Crosshill, Glasgow, { G. 23 Nov., 1886 / M. 20 Dec., 1898 }

KEMP, EBENEZER, D., Birkenhead Iron works, Birkenhead, { G. 20 Feb., 1883 / M. 25 Oct., 1892 }

KEMPT, IRVINE, Jun., Foresthill, Kelvinside, Glasgow, { G. 26 Feb., 1895 / M. 27 Apr., 1897 }

KENNEDY, ALEXANDER M'A., Rosslea, Dumbarton, 30 Apr., 1895

KENNEDY, JOHN, Messrs R. M'Andrew & Co., Suffolk House, Laurence Pountney Hill, London, E.C., 23 Jan., 1877

KENNEDY, ROBT., B.Sc., Glenfield Company, Kilmarnock, 23 Mar., 1897

KENNEDY, THOMAS, Glenfield Company, Kilmarnock, 22 Feb., 1876

KENNEDY, WILLIAM, 13 Victoria crescent, Dowanhill, Glasgow, 24 Apr., 1894

KERR, ARCHIBALD, 2 Kelvinside gardens, Glasgow, 20 Nov., 1894

KERR, JAMES, 342 Argyle street, Glasgow, 22 Feb., 1898

KIDD, ALEXANDER, Lloyd's Shipping Office, 74 Battery road, Singapore, 21 Jan., 1890

KINCAID, JOHN G., Oakfield, Greenock, 22 Feb., 1898

KING, A. C., Motherwell Bridge Co., Motherwell, 24 Jan., 1899

KING, DONALD, 1 Montgomerie cottages, Scotstoun, Glasgow, { G. 21 Dec., 1886 / M. 20 Mar., 1894 }

KING, J. FOSTER, The British Corporation, 69 St. Vincent street, Glasgow, 26 Mar., 1895

KINGHORN, JOHN G., Tower Buildings, Water street, Liverpool, 23 Dec., 1879
†KIRBY, FRANK E., Detroit, U.S.A., 24 Nov., 1885
KNIGHT, CHARLES A., 21 St Vincent place, Glasgow, 27 Jan., 1885
KNOX, ROBERT, 10 Clayton terrace, Dennistoun, Glasgow, 24 Nov., 1896
KREBS, FREDERICK, 22 Amaliegade, Cophenhagen, 23 Mar., 1880

LACKIE, WILLIAM W., 75 Waterloo street, Glasgow, 22 Nov., 1898
LADE, JAMES A., Finnart, Port-Glasgow, 27 Jan., 1891
LAIDLAW, JOHN, 98 Dundas street, S.S., Glasgow, 25 Mar., 1884
LAIDLAW, ROBERT, 147 East Milton street, Glasgow, 26 Nov., 1862
LAING, ANDREW, The Wallsend Slipway Company, Newcastle-on-Tyne, 20 Mar., 1880
LAIRD, ANDREW, 121 West Regent street, Glasgow, 22 Nov., 1898
LAMBERTON, ANDREW, Greenhill, Coatbridge, 27 Apr., 1897
LANG, C. R., Holm Foundry, Cathcart, Glasgow, { G. 20 Nov., 1888 / M. 26 Nov., 1895
LANG, JAMES, Messrs George Smith & Sons, City Line, 75 Bothwell street, Glasgow, 24 Feb., 1880
LANG, JOHN, Jun., Lynnhurst, Johnstone, 26 Feb., 1884
LANG, ROBERT, Quarrypark, Johnstone, 25 Jan., 1898
LAURENCE, GEORGE B., Clutha Iron works, Paisley road, Glasgow, 21 Feb., 1888
LAWS, BERNARD COURTNEY, Drawing office, Fairfield shipyard, Govan, 26 Oct., 1897
LE ROSSIGNOL, A. E., 88 Renfield street, Glasgow, 22 Nov., 1898
LEE, HARRISON WM., c/o Mrs M'Intyre, 42 Hill street, Garnethill, Glasgow, 25 Apr., 1899
†LEE, ROBERT, Ardenville, Bearsden, { G. 21 Dec., 1886 / M. 22 Mar., 1898
LEMKES, C. R. L., 5 Wellington street, Glasgow, { A. 26 Feb., 1884 / M. 22 Mar., 1898
LEITCH, ARCH., 40 St. Enoch square, Glasgow, 22 Dec., 1896
LESLIE, JAMES T. G., 148 Randolph terrace, Hill street, Garnethill, Glasgow, 25 Apr., 1893
LESLIE, WILLIAM, 24 Feb., 1891
LESTER, WILLIAM R., 11 West Regent street, Glasgow, { G. 21 Nov., 1883 / M. 24 Jan., 1899
LEWIN, HARRY W., 154 West Regent street, Glasgow, 20 Dec., 1898
†LINDSAY, CHARLES C., 217 W. George street, Glasgow { G. 23 Dec., 1873 / M. 24 Oct., 1876
LIST, JOHN, 3 St. John's park, Blackheath, London, S.E., 26 Feb., 1884
LITHGOW, WILLIAM T., Port-Glasgow, 21 Feb., 1893

LIVESEY, ROBT. M., Mount Stuart, 10 Windsor esplanade, Cardiff, 26 Jan., 1897

†LOBNITZ, FRED., Clarence house, Renfrew, G. 24 Mar., 1885; M. 20 Nov., 1896

LOCKIE, JOHN, Wh. Sc., 2 Custom House Chambers, Leith, 26 Jan., 1897

LONERGAN, ALFRED E., Whitefield Engine works, Govan, Glasgow, 17 Dec., 1889

LONGBOTTOM, JOHN GORDON, Technical College, 38 Bath street, Glasgow, 22 Nov., 1898

†LORIMER, WILLIAM, Glasgow Locomotive works, Gushetfaulds, Glasgow, 27 Oct., 1896

†LOUDON, GEORGE FINDLAY, 10 Claremont Terrace, Glasgow, 25 Jan., 1898

LUKE, W. J., Clydebank Shipbuilding and Engineering Co., Clydebank, 24 Jan., 1896

LUSK, HUGH D., c/o Mrs Nelson, Larch villa, Annan, 21 Feb., 1888

LYALL, JOHN, 34 Randolph gardens, Partick, 27 Oct., 1885

MACALPINE, JOHN H., Rossbank, Port-Glasgow, 20 Dec., 1898

M'ARTHUR, JAMES D., 7 Westbank place, Hillhead, Glasgow, 26 Apr., 1898

MCAULAY, W., 182 West George street, Glasgow, 22 Nov., 1898

†M'CALL, DAVID, 160 Hope street, Glasgow, 17 Feb., 1858

M'COLL, PETER, Stewartville place, Partick, G. 18 Dec., 1883; M. 24 Jan., 1899

†MACCOLL, HECTOR, Bloomfield, Belfast, 24 Mar., 1874

MACCOLL, HUGO, Wreath Quay Engineering works, Sunderland, G. 20 Dec., 1881; M. 22 Oct., 1889

M'CREATH, JAMES, 208 St. Vincent street, Glasgow, 23 Oct., 1883

M'CULLOCH, FRANK, c/o Messrs William Watson & Co., 7 Waterloo place, Pall Mall, London, S.W., 27 Jan., 1891

MACDONALD, D. H., Brandon works, Motherwell, 24 Mar., 1896

MACDONALD, JOHN, 146 West Regent street, Glasgow, 21 Mar., 1899

MACDONALD, THOMAS, 180 Hope street, Glasgow, 25 Jan., 1898

M'DOWALL, H. J., Johnstone, 21 Mar., 1899

M'EWAN, JAMES, Cyclops Foundry Co., Whiteinch, Glasgow, 26 Feb., 1884

M'EWAN, JOSEPH, 35 Houldsworth street, Glasgow, 27 Jan., 1891

MACFARLANE, JAMES W., 12 Balmoral villas, Cathcart, Glasgow, 2 Nov., 1890

MACFARLANE, JAMES, Annieslea, Motherwell, 15 June, 1898

MACFARLANE, WALTER, 12 Lynedoch crescent, Glasgow,	26 Oct., 1886
M'FARLANE, GEORGE, 121 West George street, Glasgow,	G. 24 Feb., 1874 M. 24 Nov., 1885
M'FARLANE, HUGH, 499 Duke street, Glasgow,	21 Feb., 1899
M'GECHAN, ANDREW, 232 Paisley road, West, Glasgow,	26 Apr., 1898
M'GEE, DAVID, The Cottage, Clydebank,	22 Dec., 1896
†M'GEE, WALTER, Stoney brae, Paisley,	25 Jan., 1898
M'GEOCH, DAVID BOYD, Messrs Blackwood & Gordon, Port-Glasgow,	28 Jan., 1896
M'GREGOR, J. GRANT, Canadian Pacific Railway Engineering Department, Montreal,	G. 21 Dec., 1886 M. 28 Apr., 1891
M'GREGOR, JOHN B., 19 Bell street, Renfrew,	G. 18 Dec., 1883 M. 27 Apr., 1897
M'GREGOR, THOMAS, 10 Mosesfield terrace, Springburn, Glasgow,	26 Jan., 1886
M'INDOE, JOHN B., Scottish House to House Electricity Co., Coatbridge,	21 Mar., 1899
M'INTOSH, DONALD, Dunglass, Bowling,	20 Feb., 1894
M'INTOSH, JOHN F., Caledonian Railway, St. Rollox, Glasgow,	28 Jan., 1896
M'INTYRE, HUGH, 68 Kent road, Glasgow,	22 Nov., 1887
MACK, JAMES, 22 Rutland street, Edinburgh,	G. 21 Dec., 1886 M. 20 Dec., 1898
MACKAY, EDWARD, 8 George square, Greenock,	6 Apr., 1887
M'KEAND, ALLAN, 42 Wilton gardens, Glasgow,	G. 19 Dec., 1882 M. 20 Mar., 1894
MACKECHNIE, JOHN, 342 Argyle street, Glasgow,	20 Dec., 1898
M'KECHNIE, JAMES, Messrs Vickers, Sons, & Maxim, Barrow-in-Furness,	24 Apr., 1888
MACKENZIE, JAMES, 8 St. Alban's road, Bootle,	G. 25 Oct., 1881 M. 24 Jan., 1899
MACKENZIE, THOMAS B., 342 Duke street, Glasgow,	G. 23 Jan., 1853 M. 26 Nov., 1895
M'KENZIE, JOHN, Messrs J. Gardiner & Co., 24 St. Vincent place, Glasgow,	25 Apr., 1893
M'KENZIE, JOHN, Speedwell Engineering works, Coatbridge,	25 Jan., 1898
MACKIE, WILLIAM A., Falkland bank, Partickhill, Glasgow,	22 Mar., 1881
M'KIE, J. A., Copland works, Govan,	25 Jan., 1898
†MACKINLAY, JAMES T. C., 110 Gt. Wellington street, Kinning park, Glasgow,	27 Oct., 1896
M'KINNEL, WILLIAM, 234 Nithsdale road, Pollokshields, Glasgow,	A. 21 Feb., 1893 M. 22 Feb., 1898

MACKINNON, James D., 93 Hope street, Glasgow,	24 Nov., 1896
M'LACHLAN, EWEN, 4 Abbotsford place, Glasgow,	21 Feb., 1899
M'LACHLAN, JOHN, Saucel Bank House, Paisley,	26 Oct., 1897
MACLAREN, JOHN F., B.Sc., Eglinton foundry, Canal street, Glasgow,	23 Feb., 1892
MACLAREN, ROBERT, Eglinton foundry, Canal street, Glasgow,	G. 2 Nov., 1880 M. 22 Dec., 1885
M'LAREN, THOMAS, 342 Argyle street, Glasgow,	20 Dec., 1896
McLAREN, JOHN ALEX., 182 West George street, Glasgow,	22 Nov., 1898
MACLAY, Prof. ALEX., B.Sc., Clairinch, Milngavie,	28 Apr., 1891
*MACLEAN, Sir ANDREW, Viewfield house, Partick, Glasgow.	
MACLEAN, WILLIAM DICK, 3 Weymouth terrace, Cessnock,	25 Jan., 1898
M'LELLAN, ARCHIBALD, 27 India street, Glasgow,	25 Apr., 1899
†MACLELLAN, WILLIAM T., Clutha Iron works, Glasgow,	21 Dec., 1886
M'MASTER, ROBERT, Linthouse, Glasgow,	25 Feb., 1890
M'MILLAN, JOHN, Corporation Electric Light Station, Dewar Place, Edinburgh,	G. 27 Jan., 1885 M. 24 Jan., 1899
*†MACMILLAN, WILLIAM, Holmwood, Whittinghame drive, Kelvinside, Glasgow,	
M'NAIR, JAMES, Norwood, Prestwick road, Ayr,	26 Nov., 1895
M'NEIL, JOHN, Helen street, Govan, Glasgow,	23 Dec., 1884
MACOUAT, R. B., Victoria Bolt and Rivet works, Cranstonhill, Glasgow,	21 Mar., 1899
MACPHERSON, JOHN, 128 Hope street, Glasgow,	20 Nov., 1894
MACRAE, NORMAN, Northern Gold Fields Company, Salisbury, Mashonaland, South Africa,	26 Nov., 1895
M'WHIRTER, WILLIAM, 214 Holm street, Glasgow,	24 Mar., 1891
MANSON, JAMES, G. & S. W. Railway, Kilmarnock,	21 Feb., 1899
MARR, JAMES BROWN, Belmont, Central road, W. Didsbury, Manchester,	21 Dec., 1897
MARRIOTT, REUBEN, Plantation Boiler Works, Govan, Glasgow,	23 Feb., 1897
MARSHALL, DAVID, Glasgow Tube works, Glasgow,	22 Jan., 1895
MARTIN, E. L., 122 Leadenhall street, London, E.C.,	27 Oct., 1896
MATHEWSON, GEORGE, Bothwell works, Dunfermline,	21 Dec., 1875
MATHEWSON, ROBERT C., Glenburn Iron works, Greenock,	22 Jan., 1895
MATHIESON, DONALD A., 3 Germiston street, Glasgow,	26 Jan., 1897

MATTHEY, C. A., Messrs. Fawcett, Preston & Co., Liverpool,	26 Oct., 1897
MAVOR, HENRY A., 47 King street, Bridgeton, Glasgow,	22 Apr., 1884
MAVOR, SAM, 37 Burnbank gardens, Glasgow,	20 Nov., 1894
MAY, WILLIAM W., 5 Edelweiss terrace, Partickhill, Glasgow,	25 Jan., 1876
MAYER, WM., Morwell House, Dumbarton,	23 Feb., 1897
MECHAN, HENRY, 13 Montgomerie quadrant, Glasgow,	25 Jan., 1887
MECHAN, SAMUEL, 5 Kelvingrove terrace, Glasgow,	27 Oct., 1891
MELDRUM, JAMES, 10 Victoria street, Westminster, London, S.W.,	G. 24 Oct., 1876 M. 28 Nov., 1882
MELVILLE, WILLIAM, Glasgow and South Western Railway, St. Enoch square, Glasgow,	23 Jan., 1883
MIDDLETON, R. A., Messrs Vickers, Sons, & Maxim, Barrow-in-Furness,	G. 24 Jan., 1882 M. 28 Oct., 1890
MILLAR, SIDNEY, Harthill house, Cambuslang,	G. 26 Feb., 1889 M. 21 Dec., 1897
MILLER, JOHN F., Greenoakhill, Broomhouse,	G. 23 Dec., 1873 M. 22 Nov., 1881
MINTY, WILLIAM, 15 Princes street, Pollokshields, Glasgow,	25 Apr., 1899
†MIRRLEES, JAMES B., 45 Scotland street, Glasgow,	Original
MITCHELL, ALEXANDER, Hayfield house, Springburn, Glasgow,	26 Jan., 1886
MITCHELL, GEORGE A., F.R.S.E., 5 West Regent street, Glasgow,	25 Jan., 1898
MITCHELL, THOMAS, Gower street, Bellahouston, Glasgow,	20 Nov., 1888
MOIR, ERNEST W., c/o S. Pearson & Son, 10 Victoria street, Westminster, London,	G. 25 Jan., 1881 M. 24 Jan., 1899
MOIR, JOHN, 59 Park drive, Whiteinch, Glasgow,	23 Feb., 1897
MOLLISON, JAMES, 6 Hillside gardens, Partickhill, Glasgow,	21 Mar., 1876
MOORE, JOSEPH, The Cottage, St. John's road, Richmond, London, S.W.,	21 Nov., 1883
MOORE, RALPH D., B.Sc., 13 Clairmont gardens, Glasgow,	27 Apr., 1897
MOORE, ROBERT T., B.Sc., 13 Clairmont gardens, Glasgow,	27 Jan., 1891
MORISON, WILLIAM, 41 St. Vincent crescent, Glasgow,	20 Mar., 1888
MORRICE, RICHARD WOOD, 39 Aytoun road, Pollokshields, Glasgow,	23 Feb., 1897
MORTON, ROBERT, 237 West George street, Glasgow,	G. 17 Dec., 1878 M. 23 Jan., 1883
MOTION, ROBERT, Messrs D. Stewart & Co., London road Iron works, Glasgow,	23 Feb., 1892

MOTT, EDMUND, Board of Trade Surveyor, 7 York street, Glasgow,	24 Mar., 1885
†MUIR, ALFRED, Machine Tool Maker, Sherbourne street, Manchester,	23 Feb., 1897
†MUIR, HUGH, 7 Kelvingrove terrace, Glasgow,	17 Feb., 1864
MUIR, JAMES E., 45 West Nile street, Glasgow,	22 Dec., 1896
†MUIR, JOHN G.,	24 Jan., 1882
MUIR, ROBERT WHITE, 97 St. James road, Glasgow,	21 Dec., 1897
MUIRHEAD, WILLIAM, 37 West George street, Glasgow,	26 Oct., 1897
MUMME, CARL, 30 Newark street, Greenock,	22 Oct., 1895
MUNN, ROBERT A., 137 West George street, Glasgow,	22 Dec., 1896
MUNRO, ROBERT D., Scottish Boiler Insurance Company, 111 Union street, Glasgow,	19 Dec., 1882
MURDOCH, FREDERICK TEED, Atbara, 18 Emanuel avenue, Acton, London W.,	25 Feb., 1896
MURRAY, ANGUS, Strathroy, Dumbreck,	G. 14 May, 1878 M. 19 Nov., 1889
MURRAY, HENRY, Shipbuilder, Port-Glasgow,	22 Dec., 1896
MURRAY, JAMES, Westfield, Port-Glasgow,	22 Dec., 1896
MURRAY, JAMES, 94 Washington street, Glasgow,	26 Jan., 1886
MURRAY, RICHARD, 109 Hope street, Glasgow,	26 Oct., 1897
MURRAY, THOMAS BLACKWOOD, B.Sc., 15 Roxburgh street, Dowanhill, Glasgow,	22 Dec., 1891
MURRAY, THOMAS R., Messrs. Spencer & Co., Melksham, Wilts,	25 Feb., 1896
NAPIER, HENRY M., Shipbuilder, Yoker, near Glasgow,	25 Jan., 1881
†*NAPIER, JOHN; C. Audley mansions, Grosvenor square, London,	23 Dec., 1857
†NAPIER, ROBERT T., 75 Bothwell street, Glasgow,	20 Dec., 1881
NEILSON, JAMES, Ironmaster, Mossend,	23 Mar., 1897
NELSON, ANDREW S., Snowdon, Sherbrooke avenue, Pollokshields, Glasgow,	27 Oct., 1896
NESS, GEORGE, 128a Queen Victoria street, London, E.C.,	23 Feb., 1897
NICOL, THOMAS, 2 Glenavon terrace, Partick, Glasgow,	18 Dec., 1883
NISH, WILLIAM, c/o W. L. C. Paterson, Finnieston-quay, Glasgow,	6 Apr., 1887
NORMAN, JOHN, 131a St. Vincent street, Glasgow,	11 Dec., 1861
O'BRIEN, WILLIAM, 21 Ibrox terrace, Govan, Glasgow,	27 Jan., 1891
ODAGIRI, ENJU, 7 Bentinck street, Glasgow,	24 Jan., 1899
O'NEILL, J. J., 3 Drumoyne place, Govan, Glasgow,	24 Nov., 1896

OLDFIELD, GEORGE, Atlas Works, Springburn, 22 Nov., 1898
OLIPHANT, WM., Brittannia Engine works, Kilmarnock, 23 Feb., 1897
ORMISTON, JOHN W., Douglas gardens, Uddingston, 28 Nov., 1860
ORR, ALEXANDER T., Marine Department, London and North Western Railway, Holyhead, 24 Mar., 1885
ORR, JOHN R., Motherwell Bridge Co., Motherwell, 24 Jan., 1899

PAASCH, HEINRICH, 27 Rue d'Amsterdam, Antwerp, 28 Oct., 1890
PATERSON, W. L. C., 5 Elmwood terrace, Jordanhill, Glasgow, 21 Nov., 1883
PATTERSON, JAMES, Maryhill Iron works, Glasgow, 22 Nov., 1898
PATON, ALEXANDER R., Redthorn, Partick, Glasgow, G. 25 Nov., 1879; M. 20 Nov., 1894
PATON, Professor GEORGE, Royal Agricultural College, Cirencester, 22 Nov., 1887
PATON, JOHN, 299 Shields road, Pollokshields, Glasgow, 26 Feb., 1889
PATRICK, ANDREW CRAWFORD, Johnstone, 25 Jan., 1898
PATTIE, ALEXANDER W., 24 Sutherland street, Hillhead, Glasgow, 22 Jan., 1895
PAUL, ANDREW, Levenford works, Dumbarton, 24 Apr., 1877
PAUL, H. S., Levenford works, Dumbarton, 24 Jan., 1899
PAUL, MATTHEW, Levenford works, Dumbarton, G. 26 Feb., 1884; M. 21 Dec., 1886
PEACOCK, JAMES, 6 Doune gardens, Glasgow, W., G. 22 Nov., 1881; M. 21 Feb., 1899
PEAT, JAMES D., Finnieston quay, Glasgow, 18 Dec., 1894
PECK, EDWARD C., Messrs Yarrow & Company, Poplar, London, G. 23 Dec., 1873; M. 23 Oct., 1888
PECK, JAMES J., 9 Broomhill gardens, Partick, Glasgow, 22 Dec., 1896
PENMAN, ROBERT REID, 16 Annfield place, Glasgow, 25 Jan., 1898
PENMAN, WILLIAM, Springfield house, Dalmarnock, Glasgow, 25 Jan., 1898
PHILIP, WILLIAM LITTLEJOHN, 7 Sherbrooke avenue, Pollokshields, 24 Jan., 1899
PHILP, WILLIAM T., Messrs Workman Clark & Co., Ltd., Belfast, G. 25 Oct., 1881; M. 27 Oct., 1891
PICKERING, ROBERT YOUNG, Braxfield, Lanark, 24 Nov., 1896
POOLE, WILLIAM JOHN, 19 Waverley park, Shawlands, Glasgow, 20 Dec., 1898
POLLOCK, DAVID, 128 Hope street, Glasgow, 23 Feb., 1897
POLLOK, ROBT., Craiglea, Dumbarton, 22 Dec., 1896
POPE, ROBERT BAND, Leven Shipyard, Dumbarton, 25 Oct., 1887

PRATTEN, WILLIAM J., Mornington, Derryvolgie avenue, Belfast,	22 Dec., 1896
PURDON, ARCHIBALD, Inch works, Port-Glasgow,	27 Apr., 1897
PURVES, J. A., B.Sc., F.R.S.E., 53 York place, Edinburgh,	25 Oct., 1898
PURVIS, F. P., Don villa, Greenock,	20 Nov., 1877
PUTNAM, THOMAS, Darlington Forge Co., Darlington,	15 June, 1898
PUTT, THOMAS H., 135 Kilmarnock road, Shawlands, Glasgow,	23 Mar., 1897
PYLE, JAMES H., 88 Elliot street, Glasgow,	23 Feb., 1897
RAINEY, FRANCIS E., 109 Hope street, Glasgow,	27 Apr., 1897
RAIT, HENRY M., 155 Fenchurch street, London,	23 Dec., 1868
RAMAGE, RICHARD, Shipbuilder, Leith,	22 Apr., 1873
RAMSAY, CHARLES, c/o Director of Works, Admiralty, Avenue house, Northumberland avenue, London, W.C.,	21 Dec., 1897
RANKIN, JOHN F., Eagle foundry, Greenock,	23 Mar., 1886
RANKIN, MATTHEW, Messrs Rankin & Demas, Engineers, Smyrna,	G. 2 Nov., 1880 M. 20 Mar., 1894
RANKINE, DAVID, 238 West George street, Glasgow,	22 Oct., 1872
REDFEARN, WALTER MAURICE, c/o Hydraulic Engineering Co., Chester,	25 Jan., 1898
REED-COOPER, T. L., 12 Queen's terrace, Glasgow,	22 Dec., 1896
REID, ANDREW T., Hydepark Locomotive works, Glasgow,	G. 21 Dec., 1886 M. 18 Dec., 1894
REID, CHARLES, Lilymount, Kilmarnock,	25 Jan., 1881
REID, GEORGE W., Locomotive Department, Natal Government Railways, Durban, Natal, S. Africa,	21 Nov., 1883
REID, J. MILLER, 110 Lancefield street, Glasgow,	23 Mar., 1897
REID, JAMES, Shipbuilder, Port-Glasgow,	17 Mar., 1896
REID, JAMES, 3 Cart street, Paisley,	25 Jan., 1898
†REID, JAMES B., Chapelhill, Paisley,	24 Nov., 1891
REID, JAMES G., 58 West Regent street, Glasgow,	G. 23 Dec., 1884 M. 21 Feb., 1899
†REID, JOHN, 14 Montgomerie crescent, Kelvinside, Glasgow,	G. 21 Dec., 1886 M. 18 Dec., 1894
REID, ROBERT SHAW, 161 Hope street, Glasgow,	21 Mar., 1899
REW, JAMES H., Margaretta, Dumbreck, Glasgow,	27 Oct., 1896
REYNOLDS, CHARLES H., Sir W. G. Armstrong, Mitchell & Co., Walker Shipyard, Newcastle-on-Tyne,	G. 23 Dec., 1873 M. 22 Nov., 1881
RICHMOND, Sir DAVID *(Lord Provost of Glasgow)*, North British Tube works, Govan,	21 Dec., 1897
RICHMOND, JOHN R., Holm foundry, Cathcart, Glasgow,	28 Jan., 1896

RIDDELL, W. G., 296 Renfrew street, Glasgow,	21 Feb., 1899
RILEY, JAMES, Glasgow Iron and Steel Company, Ltd., 36 St. Vincent place, Glasgow,	27 Apr., 1886
RISK, ROBERT, Halidon Villa, Cambuslang,	23 Mar., 1897
RITCHIE, GEORGE, Parkhead Forge, Glasgow,	15 June, 1898
ROBB, JAMES W., 15 Huntly terrace, Shettleston,	25 Mar., 1890
ROBERTSON, ALEX., Jun., Forgemaster, Kilmarnock,	22 Dec., 1896
ROBERTSON, ANDREW R., 8 Park Circus place, Glasgow,	G. 12 Nov., 1892 M. 23 Feb., 1897
ROBERTSON, DUNCAN, Baldroma, Ibrox, Glasgow,	24 Oct., 1876
ROBERTSON, R. A., 8 Park Circus place, Glasgow,	22 Apr., 1884
ROBERTSON, WILLIAM, 123 St. Vincent street, Glasgow,	25 Nov., 1863
ROBINSON, J. F., Atlas works, Springburn, Glasgow,	24 Apr., 1888
ROBIN, MATTHEW, 15 Clifford street, Glasgow,	G. 20 Dec., 1887 M. 25 Jan., 1898
ROBSON, GEORGE J., 22 Bath street, Glasgow,	21 Mar., 1899
*†ROBSON, HAZELTON R., 14 Royal crescent, Glasgow,	Original
RODGER, ANDERSON, Glenpark, Port-Glasgow,	21 Mar., 1893
ROSENTHAL, JAMES H., 147 Queen Victoria street, London, E.C.,	24 Nov., 1896
ROSS, J. MACEWAN, Ardenlea, Lenzie,	G. 28 Nov., 1882 M. 27 Oct., 1891
ROSS, JAMES R., Parkhead forge, Glasgow,	24 Nov., 1896
ROSS, RICHARD G., 21 Greenhead street, Glasgow,	11 Dec., 1861
ROWAN, FREDERICK JOHN, 121 West Regent street, Glasgow,	26 Jan., 1892
ROWAN, JAMES, 231 Elliot street, Glasgow,	G. 21 Dec., 1875 M. 27 Jan., 1885
ROWLEY, THOMAS, Board of Trade Offices, Virginia street, Greenock,	18 Dec., 1888
RUDD, JOHN A., 30 Hope street, Glasgow,	G. 24 Jan., 1888 M. 15 June, 1898
RUSSELL, FREDERICK ALEXANDER, 132 West Regent street, Glasgow,	25 Jan., 1888
†RUSSELL, GEORGE, Alpha Works, Motherwell,	G. 22 Dec., 1858 M. 4 Mar., 1863
†RUSSELL, JAMES, 15 Kyle park, Uddingston,	G. 24 Nov., 1891 M. 25 Jan., 1898
RUSSELL, JOSEPH, Shipbuilder, Port-Glasgow,	22 Feb., 1881
RUSSELL, JOSEPH WILLIAM, 158 Milton street, Glasgow,	G. 6 Apr., 1887 M. 25 Jan., 1898
RUSSELL, THOMAS W., Admiralty, 21 Northumberland avenue, London, W.C.,	27 Apr., 1897

RUTHERFORD, GEORGE, Mercantile Pontoon Company, Cardiff,	23 Mar., 1897
SALMON, EDWARD MOWBRAY, 2 White Lion court, Cornhill, London, E.C.,	21 Jan., 1890
SAMBRIDGE, JAMES R., Messrs J. H. Holmes & Co., Portland road, Newcastle-on-Tyne,	22 Dec., 1896
SAMPSON, ALEX. W., Barns place, Clydebank,	22 Dec., 1896
SAMSON, PETER, Board of Trade Offices, Bedford street, Covent garden, London, W.C.,	24 Oct., 1876
SAMUEL, JAMES, Jun., 185 Kent road, Glasgow,	24 Feb., 1885
SANDERSON, JOHN, Lloyd's Register, Royal Exchange, Middlesbro'-on-Tees,	20 Feb., 1883
SAYER, WILLIAM BROOKS, Glenwood, Bearsden,	25 Oct., 1892
†SCOBIE, JOHN, Box No. 93, Sierra Leone Railway, Freetown, West Coast of Africa,	G. 25 Mar., 1879 M. 23 Oct., 1888
SCOTT, CHARLES CUNNINGHAM, Greenock Foundry, Greenock,	27 Oct., 1896
SCOTT, CHARLES WOOD, Dunarbuck, Bowling,	15 June, 1898
SCOTT, JAMES, Engineer, Tayport,	22 Dec., 1896
SCOTT, JAMES, Jun., Strathclyde, Bowling,	15 June, 1898
SCOTT, JAMES E., 52 Coal Exchange, London,	30 Jan., 1872
SCOTT, JOHN, Abden works, Kinghorn,	25 Jan., 1881
SCOTT, JOHN, D., 63 Pitt street, Sydney, Auckland,	21 Nov., 1893
*SEATH, THOMAS B., 42 Broomielaw, Glasgow,	28 Nov., 1860
SELBY-BIGGE, D., 27 Mosley street, Newcastle-on-Tyne,	21 Feb., 1899
SEXTON, Professor HUMBOLDT, Glasgow and West of Scotland Technical College, 204 George st., Glasgow,	25 Feb., 1896
SHANKS, ALEXANDER, 5 Broomhill avenue, Partick,	26 Jan., 1875
SHANKS, ALEXANDER, Jun., Eastwood Engine works, Pollokshaws, Glasgow,	26 Apr., 1892
SHANKS, WILLIAM, Tubal works, Barrhead,	15 June, 1898
SHARER, EDMUND, 8 Belhaven crescent, Glasgow,	30 Apr., 1895
SHARP, JOHN, 11 Windsor Terrace, Glasgow,	G. 24 Oct., 1889 M. 22 Nov., 1895
SHEPHERD, JOHN W., Carrickarden, Bearsden,	26 Mar., 1889
SHERIFF, THOMAS, 4 Wolseley villas, Whiteinch, Glasgow,	22 Dec., 1896
SHUTE, ARTHUR E., 12 Clydeview, Partick, Glasgow,	27 Oct., 1896
SHUTE, CHARLES W., 4 Thornwood ter., Partick, Glasgow,	27 Oct., 1896
SHUTE, T. S., Lloyd's Register, Sunderland,	G. 19 Dec., 1893 M. 22 Feb., 1898
SIME, JOHN, 96 Buchanan street, Glasgow,	26 Jan., 1897

SIMONS, WILLIAM, Tighnabruaich, Argyleshire,	24 Nov., 1858
SIMPSON, ALEXANDER, 175 Hope street, Glasgow,	22 Jan., 1862
SIMPSON, ROBERT, B.Sc., 175 Hope street, Glasgow,	25 Jan., 1887
SINCLAIR, NISBET, 29 University avenue, Glasgow,	G. 20 Mar., 1877 M. 20 Dec., 1887
SINCLAIR, RUSSELL, Consulting Engineer, 97 Pitt street, Sydney, N.S.W.	G. 25 Mar., 1884 M. 24 Mar., 1891
SLIGHT, GEORGE H., Jun., c/o James Slight, 131 West Regent street, Glasgow,	G. 28 Nov., 1882 M. 22 Oct., 1889
SLOAN, J. LUMSDEN, 112 Bath street, Glasgow,	22 Nov., 1898
SMALL, WILLIAM O., 47 Clarendon street, Glasgow,	23 Feb., 1897
SMART, LEWIS A., Messrs Burroughs, Welcome & Co., Dartford, Kent,	22 Mar., 1898
SMILLIE, SAMUEL, 71 Lancefield street, Glasgow,	A. 24 Jan., 1888 M. 22 Feb., 1898
SMITH, ALEXANDER D., 487 Shields road, Pollokshields, Glasgow,	2 Nov., 1850
SMITH, HUGH WILSON, 2 Knowe terrace, Pollokshields, Glasgow,	25 Jan., 1898
SMITH, JAMES, Orange Grove Estate, Tacarigua, Trinidad, B.W.I.,	23 Oct., 1888
SMITH, OSBOURNE, Possil Engine works, Glasgow,	24 Dec., 1895
SMITH, WILLIAM, 50 Hotspur street, Tynemouth,	22 Nov., 1892
SMITH, WILLIAM J., 7 Newark drive, Pollokshields, Glasgow,	24 Jan., 1899
SNOWBALL, EDWARD, Hydepark Locomotive works, Springburn, Glasgow,	22 Feb., 1870
SOMERVAIL, PETER A., Dalmuir Ironworks, Dalmuir,	25 Jan., 1887
SOMERVILLE, THOMAS A., 264 Maxwell road, Pollokshields, Glasgow,	22 Feb., 1898
STARK, JAMES, 13 Princes gardens, Dowanhill, Glasgow,	27 Oct., 1896
†STEPHEN, ALEXANDER E., 9 Princes gardens, Dowanhill, Glasgow,	18 Dec., 1883
†STEPHEN, FREDERICK J., Linthouse, Govan, Glasgow,	30 Apr., 1895
*†STEPHEN, JOHN, Linthouse, Govan, Glasgow,	
STEVEN, JOHN, Messrs Steven and Struthers, Eastvale place, Kelvinhaugh, Glasgow,	26 Oct., 1897
STEVEN, JOHN WILSON, 18 Sandyford place, Glasgow,	20 Dec., 1898
STEVEN, WILLIAM, 18 Sandyford place, Glasgow,	23 Jan., 1894
STEVENS, JOHN, Ayton, Albert drive, Renfrew,	23 Mar., 1897
STEWART, ALEXANDER W., Crescent, Dalmuir,	23 Jan., 1894
STEWART, ANDREW, 41 Oswald street, Glasgow,	25 Feb., 1890
STEWART, DUNCAN, 47 Summer street, Glasgow,	30 Jan., 1867
†STEWART, JAMES, Harbour Engine works, 60 Portman street, Glasgow,	25 Mar., 1890

STEWART, JAMES, Messrs L. Sterne & Co., 155 North Woodside road, Glasgow,	25 Oct., 1898
STEWART, JOHN GRAHAM, B.Sc., Bredisholm, Baillieston,	22 Mar., 1892
STEWART, PETER, 53 Renfield street, Glasgow,	27 Oct., 1874
STEWART, W. B., 10 Buckingham terrace, Hillhead, Glasgow,	G. 23 Dec., 1873 M. 24 Oct., 1882
STRACHAN, ROBERT, 5 Osborne place, Govan,	22 Nov., 1898
STRATHERN, ALEXANDER G., Hillside, Stepps, N.B.,	25 Apr., 1899
STROMEYER, C. E., 9 Mount street, Manchester,	25 Apr., 1893
STUART, JAMES, 115 Wellington street, Glasgow,	22 Oct., 1889
STUART, JAMES, B.Sc., Stanley villa, Langside, Glasgow,	23 Nov., 1897
SUTHERLAND, SINCLAIR, North British Tube works, Govan,	21 Dec., 1897
SYME, JAMES 8 Glenavon terrace, Partick,	23 Jan., 1877
TANNETT, JOHN CROYSDALE, Vulcan works, Paisley,	25 Jan., 1898
TATHAM, STANLEY, Montana, Burton road, Branksome park, Bournemouth, W.,	G. 21 Dec., 1880 M. 15 June, 1898
TAVERNER, H. LACY, 48 West Regent street, Glasgow,	22 Dec., 1896
TAYLOR, PETER, c/o Messrs Taylor & Mitchell, Garvel Shipyard, Greenock,	28 Apr., 1885
TAYLOR, ROBERT, 49 Brisbane street, Greenock,	27 Oct., 1896
TAYLOR, STAVELEY, Messrs Russell & Company, Shipbuilders, Port-Glasgow,	25 Mar., 1879
TERANO, SEIICHI, 27 Derby street, Glasgow,	21 Feb., 1899
THEARLE, SAMUEL J. P., Lloyds Register of Shipping, Newcastle-on-Tyne,	22 Dec., 1896
THODE, GEORGE W., Messrs Babcock and Wilcox, Renfrew,	27 Jan., 1885
THOM, JOHN, 5 Westbank quadrant, Hillhead,	26 Feb., 1889
THOMSON, Prof. ARTHUR W., D.Sc., College of Science, Poona, India,	26 Apr., 1887
THOMSON, G. CALDWELL, 23 Elisabeth street, Riga, Russia,	24 Oct., 1893
THOMSON, GEORGE, 14 Caird drive, Partickhill, Glasgow,	18 Dec., 1883
THOMSON, GEORGE, 35 Marchmont crescent, Edinburgh,	G. 23 Nov., 1880 M. 20 Nov., 1894
THOMSON, GEORGE C., 4 The Green, Bromborough Pool, near Birkenhead,	G. 24 Feb., 1874 M. 22 Oct., 1889
THOMSON, GEORGE P., Clydebank, Dumbartonshire,	25 Apr., 1882
THOMSON, JAMES, M.A., 22 Wentworth place, Newcastle-on-Tyne,	23 Mar., 1886

THOMSON, JAMES M., Glentower, Kelvinside, Glasgow,	12 Feb., 1868
THOMSON, JAMES R., Clydebank, Dumbartonshire,	21 Mar., 1882
THOMSON, JOHN, 3 Crown terrace, Dowanhill, Glasgow,	20 May, 1868
THOMSON, R. H. B., Govan Shipbuilding yard, Govan, Glasgow,	26 Feb., 1895
THOMSON, ROBERT, Messrs Barr, Thomson & Co., Ltd., Engineers, Kilmarnock,	25 Jan., 1898
THOMSON, WALTER M., Motherwell house, Motherwell,	G. 20 Nov., 1894 M. 24 Dec., 1895
THOMSON, W. B., Ellengowan, Dundee,	14 May, 1878
THOMSON, WILLIAM, 27 University avenue, Glasgow,	G. 23 Dec., 1884 M. 27 Oct., 1896
THUNDERBOLT, EDWARD, Argus House, Portland place, Hillhead, Glasgow,	23 Feb., 1897
TIDD, E. GEORGE, 25 Gordon street, Glasgow,	22 Oct., 1895
TODD, DAVID R., Messrs Babcock & Willcox, Renfrew,	G. 25 Jan., 1887 M. 25 Oct., 1892
TULLIS, DAVID K., Kilbowie Iron works, Kilbowie,	23 Nov., 1897
TULLIS, JAMES, Kilbowie Iron works, Kilbowie,	23 Nov., 1897
TURNBULL, ALEXANDER, St. Mungo's works, Bishopbriggs, Glasgow,	21 Nov., 1876
TURNBULL, ALEXANDER POTT, 264 Maxwell road, Pollokshields, Glasgow,	25 Jan., 1898
†TURNBULL, JOHN, Jun., 18 Blythswood square, Glasgow,	23 Nov., 1875
TURNBULL, WM. GEORGE, Hallside Steel works, Newton,	21 Dec., 1897
WADDELL, JAMES, 15 Moray place, Glasgow,	23 Mar., 1897
WALLACE, DUNCAN M., 23 Ardgowan street, Greenock,	27 Oct., 1896
WALLACE, JOHN, 12 Kelvingrove street, Glasgow,	26 Jan., 1892
WALLACE, PETER, Ailsa Shipbuilding Co., Troon,	23 Jan., 1883
WALLACE, W. CARLILE, Atlas Steel and Iron works, Sheffield,	24 Mar., 1885
WARD, J. C. A., 75 Waterloo street, Glasgow,	22 Nov., 1898
WARD, JOHN, Leven Shipyard, Dumbarton,	26 Jan., 1886
WARDE, HENRY W., 71 Waterloo street, Glasgow,	15 June, 1898
WARDEN, WILLOUGHBY C., 25 Gordon street, Glasgow,	24 Mar., 1896
WATKINSON, Prof. W. H., The Pines, Crookston,	19 Dec., 1893
WATSON, G. L., 53 Bothwell street, Glasgow,	23 Mar., 1875
WATSON, WILLIAM, Superintendent Engineer, Clyde Shipping Company, Greenock,	24 Nov., 1896
WATSON, Sir W. RENNY, 16 Woodlands terrace, Glasgow,	16 Mar., 1864

WATT, ALEXANDER, Inchcape, Paisley,	25 Jan., 1898
WEBB, R. G., Messrs Richardson & Cruddas, Byculla, Bombay,	G. 21 Dec., 1875 M. 26 Oct., 1886
WEBSTER, JAMES, Messrs Sharp, Stewart, & Co., Ltd., Atlas works, Springburn, Glasgow,	21 Mar., 1899
WEDDELL, JAS., Park villa, Uddingston,	22 Dec., 1896
WEDGWOOD, ARTHUR D., Forgemaster, Dumbarton,	26 Jan., 1897
WEIGHTON, Prof. R. L., M.A., Durham College of Science, Newcastle-on-Tyne,	G. 17 Dec., 1878 M. 22 Nov., 1887
†WEIR, GEORGE, Yass, near Sydney, New South Wales,	22 Dec., 1874
†WEIR, JAMES, Holmwood, 72 St. Andrew's drive, Pollokshields,	22 Dec., 1874
WEIR, JOHN, Messrs John Scott & Co., Engineers and Shipbuilders, Kinghorn,	G. 22 Apr., 1884 M. 26 Nov., 1895
†WEIR, THOMAS, China Merchants' Steam Navigation Co., Marine Superintendent's Office, Shanghai, China,	23 Apr., 1889
WEIR, THOMAS D., Messrs Brown, Mair, Gemmill & Hyslop, 162 St. Vincent street, Glasgow,	G. 19 Dec., 1876 M. 26 Feb., 1884
WEIR, WILLIAM, Holm foundry, Cathcart, Glasgow,	G. 28 Jan., 1896 M. 22 Nov., 1898
WELSH, JAMES, 3 Princes gardens, Dowanhill, Glasgow,	G. 24 Nov., 1885 M. 26 Oct., 1897
WELSH, Thomas M., 3 Princes gardens, Dowanhill, Glasgow,	17 Feb., 1869
WEST, HENRY H., 5 Castle street, Liverpool,	23 Dec., 1868
WHITE, RICHARD S., Shirley, Jesmond, Newcastle-on-Tyne,	20 Feb., 1883
WHITEHEAD, JAMES, 6 Buchanan terrace, Paisley,	6 Apr., 1887
WILDRIDGE, JOHN, Consulting Engineer, Sydney, N.S.W., Australia,	25 Nov., 1884
WILKS, HARRY, 112 Bath street, Glasgow,	22 Nov., 1898
WILLIAMS, LLEWELLYN WYNN, B.Sc., Cathcart, Glasgow,	22 Feb., 1898
WILLIAMSON, ALEXANDER, 67 Esplanade, Greenock,	21 Mar., 1899
WILLIAMSON, JAMES, Director H.M. Dockyards, Whitehall, London,	23 Dec., 1884
WILLIAMSON, JAMES, Marine Superintendent, Gourock,	24 Mar., 1896
WILLIAMSON, ROBERT, Brithdir works, Alexandra docks, Newport, Mon.,	20 Feb., 1883
WILSON, ALEXANDER, Dawsholm Gasworks, Maryhill, Glasgow,	28 Jan., 1896
WILSON, ALEXANDER, Hyde Park Foundry, Finnieston street, Glasgow,	23 Feb., 1897

*WILSON, ALEX. H., Aberdeen Iron works, Aberdeen,	
WILSON, DAVID, Arecibo, Porto Rico, West Indies,	25 Oct., 1887
WILSON, GAVIN, 107 Pollok street, S.S., Glasgow,	22 Oct., 1889
WILSON, JAMES, Engineer, Corporation Water Works, Edinburgh,	23 Dec., 1868
†WILSON, JOHN, 165 Onslow drive, Dennistoun, Glasgow,	22 Feb., 1870
WILSON, JOHN, 154 West George street, Glasgow,	24 Dec., 1895
WILSON, MATTHEW G., 43 Oxford street, Glasgow,	25 Jan., 1898
WILSON, W. H., 45 Scotland street, Glasgow,	22 Feb., 1898
WILSON, WILLIAM, Lilybank Boiler works, Glasgow,	30 Apr., 1895
*†WINGATE, THOMAS, Viewfield, Partick, Glasgow,	20 Jan., 1858
WOOD, ROBERT C., 26 Brisbane street, Greenock,	23 Mar., 1897
WORKMAN, HAROLD, B.Sc., Dunluce, Dullatur,	21 Dec., 1897
WRENCH, WILLIAM G., 27 Oswald street, Glasgow,	25 Mar., 1890
WRIGHT, ROBERT, 172 Kilmarnock Road, Shawlands,	22 Dec., 1896
WYLIE, ALEXANDER, Kirkfield, Johnstone,	26 Oct., 1897
WYLLIE, JAMES BROWN, 134 St. Vincent street, Glasgow,	G. 25 Oct., 1887 M. 26 Jan., 1897
WYLIE, WILLIAM, 33 Maxwell drive, Pollokshields, Glasgow,	26 Apr., 1898
YOUNG, JOHN, Galbraith street, Stobcross, Glasgow,	27 Nov., 1867
YOUNG, J. DENHOLM, 2a Tower Chambers, Liverpool,	G. 24 Jan., 1888 M. 23 Jan., 1894
YOUNG, THOMAS, 4 West Regent street, Glasgow,	20 Mar., 1894
YOUNG, WILLIAM L., 33/35 Stanley street, Kinning Park, Glasgow,	22 Nov., 1898
YOUNG, WILLIAM ANDREW, Millburn House, Renfrew,	26 Mar., 1895
YOUNGER, A. SCOTT, 8 Walmer crescent, Glasgow,	24 Nov., 1896

ASSOCIATES.

*AITKEN, THOMAS, 8 Commercial street, Leith.	
ANDREWS, HENRY W., 128 Hope Street, Glasgow,	21 Dec., 1897
ALLAN, ALEXANDER B., Clyde Wire Ropery, Rutherglen,	27 Apr., 1897
ARMOUR, WILLIAM NICOL, 175 West George street, Glasgow,	24 Nov., 1896
BAIN, ANDREW, 17 Athole gardens, Glasgow,	26 Oct., 1897
BAILLIE, ARCHIBALD, 2 Balmoral terrace, Glasgow,	25 Jan., 1898
BEGG, WILLIAM, 34 Belmont gardens, Glasgow,	19 Dec., 1886
BLAIR, HERBERT J., 30 Gordon street, Glasgow,	23 Feb., 1897
BROWN, Capt. A. R., 24 George square, Glasgow,	21 Dec., 1897
†BROWN, JOHN, B.Sc., 11 Somerset place, Glasgow,	25 Jan., 1876
BRYCE, JOHN, Sweethope cottage, North Milton road, Dunoon,	18 Jan., 1865
CASSELLS, JOHN, Hazel bank, 62 Glencairn drive, Pollokshields, Glasgow,	21 Dec., 1889
CASSELS, WILLIAM, Cairndhu, 12 Newark drive, Pollokshields, Glasgow,	21 Feb., 1893
CLAUSSEN, A. L., 118 Broomielaw, Glasgow,	22 Jan., 1892
DEWAR, JAMES, 11 Regent Moray street, Glasgow,	22 Dec., 1897
DOBBIE, W. L., 101 Waterloo street, Glasgow,	20 Dec., 1898
DODDRELL, EDWARD E., 11 Bothwell street, Glasgow,	26 Oct., 1897
FERGUSON, PETER, 19 Exchange square, Glasgow,	27 Apr., 1897
FISHER, WALTER L., Glenburn Iron works, Greenock,	26 Mar., 1895
GALLOWAY, JAMES, Jun., Whitefield works, Govan, Glasgow,	27 Oct., 1891
GARDNER, JAMES S., 120 Holland street, Glasgow,	23 Mar., 1897
GOODRICH, WALTER FRANCIS, 37 Great Pulteney street, London, W.,	21 Dec., 1897
GUTHRIE, ALLAN, 2 Whittinghame drive, Kelvinside, Glasgow,	25 Jan., 1898
HALLIDAY, GEORGE, 45 Torrington square, London, W.C.,	21 Dec., 1897

Names marked thus * were Associates of Scottish Shipbuilders' Association at incorporation with Institution, 1865.

Names marked thus † are Life Associates.

HOLLIS, H. E., 40 Union street, Glasgow, 23 Nov., 1897
HOLLIS, JOHN, 40 Union street, Glasgow, 23 Nov., 1897

KINGHORN, WILLIAM A., 81 St. Vincent street, Glasgow, 24 Oct., 1882
KYLE, JOHN, Cathay, Forres, N.B., 23 Feb., 1897

M'ARA, ALEXANDER, 65 Morrison street, Glasgow, 22 Nov., 1892
MACBETH, GEORGE ALEXANDER, 65 Great Clyde street, Glasgow, 24 Jan., 1899
MACBRAYNE, LAWRENCE, 11 Park Circus place, Glasgow, 26 Mar., 1895
MACDOUGALL, DUGALD, 1 Crosshore street, Greenock, 26 Jan., 1897
M'GECHAN, ROBT. K., 17 Oswald street, Glasgow, 26 Apr., 1898
M'INTYRE, JOHN, 33 Oswald street, Glasgow, 23 Feb., 1897
M'INTYRE, T. W., 21 Bothwell street, Glasgow, 24 Jan., 1893
M'MILLAN, ARCHIBALD, Dunollie, Dalmuir, 25 Jan., 1898
M'PHERSON, Captain DUNCAN, 3 Cecil street, Paisley road, West, Glasgow, 26 Jan., 1886
MERCER, JAMES B., Broughton Copper works, Manchester, 24 Mar., 1874
MILLAR, THOMAS, Hazelwood, Langside, Glasgow, 22 Mar., 1898

MOWBRAY, ARCHIBALD H., c/o Messrs Smith & M'Lean, Mavisbank, Glasgow, 22 Feb., 1898
MORTON, ALFRED, 8 Prince's square, Glasgow, 22 Feb., 1898

*NAPIER, JAMES S., 33 Oswald street, Glasgow.

PRENTICE, THOMAS, 175 West George street, Glasgow, 24 Nov., 1896

REID, JOHN, 30 Gordon street, Glasgow, 22 Dec., 1896
RIGG, WILLIAM, 3 Grantly place, Shawlands, Glasgow, 22 Jan., 1889
RIDDLE, JOHN C., 8 Gordon street, Glasgow, 15 June, 1898
RITCHIE, JAMES, 40 St. Enoch square, Glasgow, 22 Mar., 1898
ROBERTS, WILLIAM IBBOTSON, Globe Steel works, Sheffield, 15 June, 1898
ROBERTSON, WILLIAM, Oakpark, Mount Vernon, 27 Apr., 1897
ROSS, THOMAS A., Glenwood, Bridge-of-Weir, 20 Mar., 1894

SERVICE, GEORGE WILLIAM, 175 West George street, Glasgow, 24 Nov., 1896

SMITH, GEORGE, 75 Bothwell street, Glasgow,	25 Jan., 1876
SMITH, JOHN, 2 Doune quadrant, Kelvinside, Glasgow,	22 Feb., 1898
STRACHAN, G., Fairfield works, Govan,	26 Oct., 1897
TAYLOR, JOHN, Stanley house, South avenue, Govan,	25 Jan., 1898
WALLACE, H., 544 St. Vincent street, Glasgow,	27 Apr., 1897
WARREN, ROBERT G., 115 Wellington street, Glasgow,	28 Jan., 1896
WATSON, H. J., 5 Oswald street, Glasgow,	
WEBSTER, J. A., Clydesdale works, Sheffield,	23 Nov., 1897
WEIR, ANDREW, 102 Hope street, Glasgow,	25 Jan., 1898
WILD, CHARLES WILLIAM, Broughton Copper Company, Limited, 49-51 Oswald street, Glasgow,	24 Mar., 1896
WREDE, FREDERICK LEAR, 25 Bentinck street, Greenock,	25 Jan., 1898
YOUNG, JOHN D., Scottish Boiler Insurance Company, 111 Union street, Glasgow,	19 Dec., 1882
YOUNG, WILLIAM, Galbraith street, Stobcross, Glasgow.	

GRADUATES.

ADAM, MATTHEW A., 12a Hydepark mansions, London, N.W.	28 Apr., 1896
AGNEW, WILLIAM H., Messrs. Laird Brothers, Birkenhead,	28 Nov., 1882
ALBRECHT, J. AUGUST, 22 Eskdale street, Crosshill,	23 Nov., 1897
ALISON, ALEXANDER E., Devonport, Auckland, New Zealand,	22 Nov., 1898
ALLAN, JAMES, 144 Buccleuch street, Glasgow,	24 Jan., 1888
ANDERSON, ADAM R., Croftvale, Renfrew,	23 Mar., 1897
ANDERSON, GEORGE C., Mavisbank, Partickhill, Glasgow,	24 Dec., 1895
ARBUTHNOTT, DONALD S., c/o Messrs Charles Brand & Son, 172 Buchanan street, Glasgow,	23 Oct., 1888
ARNOTT, HUGH STEELE, Ravenswood, Annfield road, Partick, Glasgow,	26 Oct., 1897
ARUNDEL, ARTHUR S. D., Penn street works, Hoxton, London, N.,	23 Dec., 1890
BAKER, FREDERICK, W., 149a Tremont street, Boston, U.S.A.,	20 Mar., 1894
BARBA, ALFONSO G., c/o Messrs. J. M. & E. Montoya, Puerto Birrio, Republic of Colombia,	22 Dec., 1896
BARMAN, HARRY D. D., 27 University avenue, Glasgow,	24 Apr., 1888
BAXTER, EDMUND G.,	22 Nov., 1892

BELL, NORMAN, 3 Provan place, Montrose street, Glasgow,	27 Oct., 1896
BENNETT, DUNCAN, c/o Mills, 91 Kent road, Glasgow,	26 Oct., 1897
BERTRAM, R. M., 35 Crow road, Partick,	24 Jan., 1899
BINLEY, WILLIAM, Jun., Box 36, Newport, News, Virginia, U.S.A.,	21 Mar., 1899
BLACK, JOHN, 51 Montgomerie street, Kelvinside, Glasgow,	25 Oct., 1892
BLAIR, ARCHIBALD, 15 Craigmore terrace, Partick,	27 Oct., 1885
BLAIR, ARCHIBALD, Jun., 7 Corunna street, Glasgow,	27 Oct., 1891
BLAIR, FRANK R., Ashbank, Maryfield, Dundee,	22 Mar., 1892
BOWIE, ROBERT, 180 Hope street, Glasgow,	20 Nov., 1894
BOWMAN, W. D.,	22 Dec., 1891
BOYD, GUY W., 136 Wellington street, Glasgow,	26 Oct., 1897
BOYLE, EDWARD S. S., 9 Arlington street, Glasgow,	25 Jan., 1898
BRAND, MARK, B.Sc., Barrhill cottage, Twechar, Kilsyth,	24 Jan., 1888
BROWN, ALEXANDER TAYLOR, 2 Parkgrove terrace, Sandyford, Glasgow,	26 Oct., 1897
BROWN, DAVID A., Duncairn gardens, Belfast,	23 Feb., 1897
BROWN G. J. L., 2 Sandringham terrace, Ayr,	21 Mar., 1899
BROWN, JAMES,	20 Mar., 1888
BROWN, J. POLLOCK, 2 Park Grove terrace, Glasgow,	18 Dec., 1894
BRYCE, JOHN, 10 Wilton drive, Glasgow,	22 Dec., 1896
BUCHANAN, WALTER G., 17 Sandyford place, Glasgow,	27 Jan., 1891
BURNSIDE, BERTRAM W., c/o Mrs Stewart, 16 Flemington street, Springburn, Glasgow,	24 Feb., 1891
CAIRD, WILLIAM, 6 Maryon road, Old Charlton, London, S.E.,	21 Jan., 1890
CALDER, JOHN, 37 Forest road, Aberdeen,	24 Feb., 1891
CALDWELL, HUGH, Oak house, Blackwood, Newport, Mon.,	27 Jan., 1391
CAMERON, HUGH, 40 Camperdown road, Scotstoun, Glasgow,	25 Oct., 1892
CAMPBELL, ANGUS, 25 Stafford road, Southampton,	24 Jan., 1888
CARSLAW, WILLIAM H., Jun., Parkhead Boiler works, Parkhead, Glasgow,	23 Dec., 1890
CASSELLS, ROBERT D., B.Sc., 62 Glencairn drive, Pollokshields, Glasgow,	28 Oct., 1890
CHALMERS, ALEX. D., Electricity works, New Brompton, Kent,	27 Oct., 1896

CLELAND, JOHN, B.Sc., Mansion house, Easterhouse,	26 Feb., 1884
CLELAND, W. A., Yloilo, Philippine Islands,	25 Apr., 1893
COCHRANE, JAMES, Resident Engineer's Office, Harbour works, Table Bay, Capetown,	27 Oct., 1891
CRAIG, ALEXANDER, Netherlea, Partick, Glasgow,	26 Nov., 1895
CRAIG, JAMES, Netherlea, Partick,	22 Feb., 1896
CRAIG, JAMES C. M., 3 Tulliallan place, Paisley road, W., Glasgow,	22 Nov., 1896
CRAWFORD, JAMES M., 50 North Frederick street, Glasgow,	22 Nov., 1896
CRICHTON, J., 155 Berkeley street, Glasgow,	23 Nov., 1897
CUNNINGHAM, P. NISBET, Jun., Easter Kennyhall house, Cumbernauld road, Glasgow,	22 Nov., 1896
DAVIDSON, WM. J. J., Castlehill, Renfrew,	22 Nov., 1898
DAVIES, HARRY L., 14 Barton street, Westminster, London, S.W.,	18 Dec., 1888
DAVIES, PERCY M., 36 Roslea drive, Dennistoun, Glasgow,	24 Jan., 1899
DEKKE, KRISTIAN S., Bergen, Norway,	22 Dec., 1891
DEVERIA, LEWIS M. T., c/o Messrs P. M'Intosh & Son, 129 Stockwell street, Glasgow,	10 Feb., 1883
DIACK, JAMES A., 10 Caird drive, Partickhill, Glasgow,	22 Jan., 1895
DICK, THOMAS B., Post office, Vallejo, California, U.S.A.,	23 Nov., 1886
DOBSON, JAMES, Queen street, Kidsgrove, Staffordshire,	22 Dec., 1896
DONALD, PATRICK D., B.Sc.,	24 Feb., 1891
DONALDSON, A. FALCONER, Beechwood, Partick, Glasgow,	27 Oct., 1896
DONALDSON, GEORGE, 44 Gardner street, Partick,	22 Nov., 1898
DOUGLAS, CHARLES STUART, "St. Brides," 12 Dalzell drive, Pollokshields, Glasgow,	24 Jan., 1899
DUNCAN, JAMES GRIEVE, 137 Shields road, Glasgow,	22 Nov., 1898
DUNLOP, ALEX., 14 Derby terrace, Sandyford, Glasgow,	21 Dec., 1897
DUNN, TURNER, 20 Park circus, Glasgow,	21 Feb., 1893
EDMISTON, ALEXANDER A., Ibrox house, Govan,	22 Feb., 1898
FEIST, JOHN ARNOLD, Taradale cottage, East Peckham, Kent,	24 Mar., 1896
FERGUS, ALEXANDER, 7 Ibrox place, Glasgow,	22 Dec., 1891
FERGUSON, JAMES M.,	25 Oct., 1892

FERGUSON, LEWIS, Fergus villa, Paisley,	22 Jan., 1895
FERGUSON, PETER, Jun., Fergus villa, Paisley,	22 Jan., 1895
FERGUSSON, W. L., Hawcoat lane, Abbey road, Barrow-in-Furness,	22 Dec., 1891
FINDLAY, LOUIS, c/o Mrs Ferguson, 29 Bentinck street, Glasgow,	21 Feb., 1893
FRANCE, JAMES, 8 Hanover terrace, Kelvinside, Glasgow,	26 Oct., 1897
FRASER, J. IMBRIE, 13 Sandyford place, Glasgow,	27 Apr., 1886
FULTON, NORMAN O., Woodbank, Mt. Vernon, Glasgow,	23 Feb., 1892
FYFE, CHARLES F. A., 38 Burnbank gardens, Glasgow,	18 Dec., 1894
GALBRAITH, HUGH, 75 Waterloo street, Glasgow,	20 Dec., 1898
GALLOWAY, ANDREW, 11 Camphill avenue, Langside, Glasgow,	24 Oct., 1893
GARDNER, HUGH, Minas Schwager, Coronel, Chili,	23 Apr., 1889
GIBB, JOHN, 43 Waterside street, Kilmarnock,	24 Jan., 1899
GIBSON, ROBERT E., Engineer's Office, St. Enoch station, Glasgow,	25 Jan., 1898
GILMOUR, ALEXANDER, Barrhead,	22 Nov., 1898
GILMOUR, ANDREW, Kadikoi place, Kilmarnock,	20 Dec., 1898
GOUDIE, WILLIAM J., B.Sc., 92 Albert drive, Crosshill, Glasgow,	21 Dec., 1897
GOURLAY, JAMES, 11 Crown gardens, Dowanhill, Glasgow,	27 Oct., 1891
GOURLAY, R. CLELAND, 11 Crown gardens, Glasgow,	24 Dec., 1895
GOVAN, WILLIAM A., Westholme, West Kilbride,	18 Dec., 1894
GRAHAM, GEORGE, 3 Park terrace, Govan,	22 Nov., 1898
GRUNING, HENRY H., 5 Park terrace, Govan,	20 Dec., 1898
HARVEY, ERNEST RIVERS,	22 Mar., 1898
HAY, WILLIAM,	20 Dec., 1892
HENDERSON, CHARLES A., 251 St. Vincent street, Glasgow,	24 Jan., 1899
HENDERSON, HARRY ESDON, 129 Paisley rd. W., Glasgow,	22 Nov., 1898
HEPTING, F. W. L., 2 Albert mansions, Crosshill, Glasgow,	20 Nov., 1894
HOLLAND, HENRY NORMAN, c/o Bowman, 366 New City road, Glasgow,	22 Nov., 1898
HORN, PETER ALLAN, 201 Kent road, Glasgow,	26 Oct., 1897
HOUSTON, PERCIVAL T., 22 Lancaster Gate, London,	22 Nov., 1898
HOUSTON, WILLIAM C., 4 Abbotsford place, Glasgow,	26 Oct., 1897
HOWSON, GEORGE, c/o Macdougall, 9 Buckingham terrace, Partick,	22 Dec., 1891
HUDSON, GERARD, Drawing office, Clydebank shipyard, Clydebank,	22 Jan., 1895

INGLIS, JOHN F., Pointhouse Shipyard, Partick, 26 Oct., 1897
INNES, W., 11 Walmer terrace, Glasgow, 22 Feb., 1898
IRVINE, ARCHIBALD B., 3 Newton terrace, Glasgow, 20 Nov., 1894

JOHNSTONE, ALEXANDER C., 7 Blackburn street, Paisley road, West, Glasgow, 25 Jan., 1898
JOHNSTONE, ROBT., 298 Byres road, Partick, 26 Apr., 1898
JONES T. C., Rose Cottage, Langlands road, Govan, 23 Nov., 1897
JUDD, EDWIN H., 65 South Cromwell road, Crosshill, 20 Dec., 1898

KAY, ALEXANDER J., 38 Hill street, Garnethill, Glasgow, 24 Oct., 1893
KEMP, JOHN, 1 Thornwood terrace, Partick, Glasgow, 28 Oct., 1890
KEMP, ROBERT G., 2 Ravenscroft avenue, Connswater, Belfast, 28 Oct., 1890
KING, CHARLES A., G.N.R. works' office, Shirebrook, Derbyshire, 25 Apr., 1893
KING, JOHN, 16 Lefroy street, Newcastle-on-Tyne, 26 Jan., 1886
KINMONT, DAVID W., Railway Contractor's office, Larkhall, 20 Feb., 1894
KIRK, JOHN, 4 Minard terrace, Partickhill, Glasgow, 20 Nov., 1894
KIRKWOOD, WILLIAM D., 30 Queen Mary avenue, Glasgow, 26 Oct., 1897
KNOX, ALEX., 12 Westbank terrace, Hillhead, Glasgow, 23 Nov., 1897

LAING, ROBERT, Northbank, Partickhill, Glasgow, 21 Feb., 1893
LAMONT, THOMAS W., Hawkhead works, Paisley, 22 Nov., 1892
LAUDER, THOMAS H., Parkhead forge, Glasgow, 19 Dec., 1893
LAW, ALEXANDER, 44 Dowanhill street, Partick, 26 Apr., 1898
LE CLAIR, LOUIS J., 5 Petershill road, St. Rollox, Glasgow, 24 Nov., 1896
LEE, JOHN, 15 St. John street, Mansfield, 26 Jan., 1886
LEITCH, WILLIAM ORR, Jun., Engineer's Department, Imperial Railway, Tientsin, North China, 22 Dec., 1891
LENNOX, ALEXANDER, 34 Glasgow street, Hillhead, Glasgow, 23 Jan., 1894
LENNOX, GEORGE K., 28 Apr., 1896
LESLIE, JOHN, 29 Elder Park street, Govan, Glasgow, 20 Dec., 1892
LLOYD, HERBERT J., Heathcote, 11 Greenlaw avenue, Paisley, 21 Dec., 1897

M'ARTHUR, ARCHIBALD, 19, Ainslie gardens, Partickhill, Glasgow, 24 Jan., 1893
MACCALLUM, PATRICK F., Milton House works, Abbey hill, Edinburgh, 2 Nov., 1880
MACDONALD, JOHN F., 5 Caird Drive, Partickhill, 21 Dec., 1897
MACEWAN, HENRY, 5 Cathkin terrace, Mount Florida, Glasgow, 27 Oct., 1891
M'EWAN, JOHN, 3 Norse Road, Scotstoun, Glasgow, 26 Oct., 1887
MACFARLANE, DUNCAN, Jun., 25 St. Andrew's drive, Pollokshields, Glasgow, 26 Oct., 1897
M'GANN, M. R., 23 Mar., 1897
M'GILLIVRAY, JOHN A., 167 Broomloan road, Govan, 26 Oct., 1897
M'GREGOR, JOHN L., Coatbank Engine works, Coatbridge, 28 Jan., 1896
M'HOUL, JOHN B., 2 Windsor terrace, Langside, Glasgow, 24 Jan., 1899
M'INTOSH, GEORGE, Dunglass cottage, Bowling, 22 Jan., 1895
M'INTOSH, JOHN, Oak bank, Bowling, 22 Jan., 1895
MACINTOSH, JOHN, 7 Park quadrant, Glasgow, 18 Dec., 1894
MACKAY, HARRY J. S., 13 Spring Head, Edgbaston, Birmingham, 22 Feb., 1898
MACKAY, LEWIS C., Jun., 2 Maybank street, Crosshill, Glasgow, 22 Dec., 1896
MACKIE, JAMES, 478 St. Vincent street, Glasgow, 23 Mar., 1897
MACKIE, THOMAS P., 27 Alexander street, Glasgow, 23 Feb., 1897
MACKIE, WILLIAM, 29 Thomson street, Govan, 21 Dec., 1897
M'KINNELL, ROBERT, 56 Dundas street, S.S., Glasgow, 26 Feb., 1883
MACKINTOSH, ROBERT D., Bellevue place, Garngad hill, Glasgow, 20 Nov., 1894
M'LEAN, JOSEPH M., c/o Shaw, 53 South street, Huddersfield, 26 Apr., 1898
MACLEOD, T. TORQ. M., c/o Robertson, 5 Prince of Wales terrace, Byars road, Glasgow, 27 Oct., 1896
MACMILLAN, CAMPBELL, B.Sc, 32 Gibson street, Glasgow, 24 Nov., 1896
M'VITAE, ANDREW, 4 Clutha street, Paisley road, West, Glasgow, 21 Dec., 1886
M'WHIRTER, ANTHONY C., 214 Holm street, Glasgow, 21 Dec., 1897
MAITLAND, CREE, Manager, Sunger Ujong Railway, Port Dickson, Malay Peninsula, 22 Feb., 1887
MAITLAND, JOHN, 155 North street, Glasgow, 20 Nov., 1894
MATHER, JOHN BOYD, Kirkhill, Mearns, 20 Mar., 1894

MENZIES, GEORGE, 20 St. Vincent crescent, Glasgow, 22 Jan., 1889
MENZIES, ROBERT, 22 Jan., 1889
MERCER, JOHN, c/o Miss Berry, 2 Glenavon terrace, Crow road, Partick, 22 Oct., 1895
MILLAR, JOHN S., 22 Rothesay gardens, Partick, 20 Nov., 1894
MILLAR, THOMAS, Sir W. G. Armstrong, Whitworth & Co., Ltd., Walker Shipyard, Newcastle-on-Tyne, 25 Nov., 1884
MILLER, ALEXANDER, 2 Ailsa terrace, Hillhead, Glasgow, 22 Nov., 1898
MILLER, JAMES, 20 Iona place, Mt. Florida, Glasgow, 22 Nov., 1898
MILLER, JAMES WILLIAM, 13 Drumoyne drive, Govan, 20 Dec., 1898
MILLER, JOHN, 811 Govan road, Govan, Glasgow, 23 Apr., 1889
MILLER, ROBERT F, 10 Windsor terrace, West, Glasgow, 25 Feb., 1890
MITCHELL, CHARLES, 1 Cambridge terrace, Pollokshields, Glasgow, 25 Jan., 1898
MITCHELL, R. M., 24 Howard street, Bridgeton, Glasgow, 23 Nov., 1897
MOLLISON, HECTOR A., B.Sc., 6 Hillside gardens, Partickhill, Glasgow, 22 Nov., 1892
MORRISON, ARTHUR M., 15 Albion crescent, Dowanhill, Glasgow, 17 Dec., 1889
MORRISON, A., Alt-na-craig, Greenock, 23 Nov., 1897
MORT, ARTHUR, c/o Mrs French, 71 Church lane, Old Charlton, Kent, 26 Jan., 1897
MORTON, CHARLES C., Ingleside, The Park, Waterloo, Liverpool, 25 Jan., 1898
MORTON, W. REID, Strathview, Bearsden, 26 Oct., 1897
MOWAT, MAGNUS, 12 Talbot lane, Leicester, 26 Oct., 1897
MUIR, ANDREW A., 23 Randolph gardens, Partick, 22 Nov., 1898
MUIR, JAMES H., 140 Bath street, Glasgow, 26 Jan., 1892
MUIRHEAD, WILLIAM, Cloberhill, Knightswood, Maryhill, Glasgow, 28 Apr., 1891
MUMME, ERNEST C., c/o Agent and Chief Engineer, Bengal and North-Western Railway, Gorakpur, North-West Provinces, India, 22 Nov., 1892
MURDOCH, JOHN A., 7 Park Circus place, Glasgow, 25 Oct., 1892
MURPHY, B. STEWART, c/o C. H. Bailey, Esq., Barry Dock, Cardiff, 24 Oct., 1893
MYLES, DAVID, Northumberland Engine works, Wallsend-on-Tyne, 20 Dec., 1887
MYLNE, ALFRED, 116 Woodlands road, Glasgow, 26 Jan., 1897

NAPIER, JOHN S., Herbertshire, Denny, 26 Jan., 1892

NEWTON, CHARLES A., 11 Carnarvon street, Glasgow,	25 Jan., 1898
NICHOLSON, THOMAS,	26 Jan., 1886
NIVEN, JOHN, 36 Princes square, Strathbungo, Glasgow,	22 Nov., 1898
NOWERY, WILLIAM, 37 Derby street, Glasgow,	21 Dec., 1897
ORR, J., 53 Bentinck street, Glasgow,	22 Oct., 1895
ORR, JOHN, B.Sc., South African College, Cape Town,	26 Mar., 1895
OSBORNE, HUGH, 30 Rose street, Garnethill, Glasgow,	22 Dec., 1891
OSBORNE, MARSHALL, Ashlea, Clooney, Londonderry,	22 Dec., 1891
PATERSON, JAMES V., 307 Walnut street, Philadelphia, U.S.A.,	24 Jan., 1888
PATERSON, JOSEPH BARR, 15 Eldon street, Glasgow,	22 Mar., 1898
PATON, THOMAS, 1 Rosemount terrace, Ibrox, Govan, Glasgow,	20 Dec., 1892
POLLOCK, GILBERT F., 10 Beechwood drive, Tollcross, Glasgow,	27 Jan., 1891
POLLOK, JOHN, Portland park, Hamilton,	22 Feb., 1898
PORTCH, ERNEST C., 37 Vicars hill, Ladywell, Kent,	26 Oct., 1897
PRESTON, JOHN C., Assistant Engineer, Brisbane Board of Water works, Brisbane, Queensland,	6 Apr., 1887
PRENTICE, HUGH, Millbank, Yoker,	26 Apr., 1898
PRINGLE, WILLIAM S., 97 Desswood place, Aberdeen,	24 Oct., 1893
RALSTON, SHIRLEY B., 34 Gray street, Glasgow,	23 Feb., 1897
RANKEN, FRANCIS, 11 Spence street, Newington, Edinburgh,	22 Nov., 1898
RAPHAEL, ROBERT A., 150 Renfrew street, Glasgow,	24 Dec., 1895
REID, DAVID H., Attiquin, Maybole,	25 Oct., 1887
REID, HENRY P., 12 Grantly gardens, Shawlands, Glasgow,	20 Dec., 1898
REID, JAMES, 128 Dumbarton road, Glasgow,	22 Oct., 1895
REID, WALTER,	26 Feb., 1884
RICHMOND, JAMES, 24 Sutherland terrace, Hillhead, Glasgow,	23 Jan., 1894
RICHMOND, JOHN H., Tyne Commission works, Newcastle-on-Tyne,	23 Jan., 1894
RITCHIE, JAMES, Wraymont villas, Bloomfield, Belfast,	26 Oct., 1897
ROBERTSON, ALEXANDER, 272 Darnley street, Pollokshields, Glasgow,	26 Oct., 1886
ROBERTSON, EDWARD F.,	28 Oct., 1890
RODGER, ANDERSON, Jun., Glenpark, Port-Glasgow,	15 June, 1898

ROGER, GEORGE WILLIAM, Irvine Shipbuilding and Engineering Coy., Ltd., Irvine,	24 Nov., 1896
ROSS, J. R., 64 Sandyford street, Glasgow,	25 Oct., 1898
ROY, WILLIAM, 66 Meanley road, Manor park, Essex,	25 Jan., 1898
RUSSELL, JAMES, 63 Southfield road, Middlesbrough,	22 Dec., 1891
SADLER, HERBERT C., B.Sc., 2 Minard terrace, Partickhill, Glasgow,	19 Dec., 1893
SCOBIE, ALEXANDER, Culdees, Partickhill, Glasgow,	27 Oct., 1885
SCOTT, HARRY, 76 Kenmure st., Pollokshields, Glasgow,	22 Dec., 1896
SCOTT, JOHN R., 51 Love street, Paisley,	21 Dec., 1897
SCOTT, THOMAS R., 101 Mayfield road, Edinburgh,	22 Dec., 1896
SEATH, THOMAS R., Sunny Oaks, Langbank,	23 Mar., 1886
SEATH, WILLIAM Y., Sunny Oaks, Langbank,	23 Mar., 1886
SEXTON, GEORGE A., 1 Hamilton terrace, W., Partick,	24 Nov., 1896
SHARPE, WILLIAM, Engineer-in-Chief's office, Natal Government Railway, Maritzburg, Natal,	24 Dec., 1895
SHAW, JOHN J., 12 Lynedoch place, Glasgow,	24 Apr., 1894
SIBBALD, THOMAS KNIGHT, c/o Messrs Cook & Son, Cairo, Egypt,	26 Oct., 1897
SIMPSON, DAVID C., 1 Fairlie Park drive, Crow road, Partick,	20 Dec., 1892
SLOAN, JOHN ALEXANDER, 11 Rose street, Garnethill, Glasgow,	25 Jan., 1898
SMITH, ALEXANDER, 5 Doune quadrant, Kelvinside, Glasgow,	24 Nov., 1891
SMITH, CHARLES, 3 Rosemount terrace, Ibrox,	24 Apr., 1894
SMITH, GEORGE F., 11 Woodside terrace, Glasgow,	26 Oct., 1897
SMITH, JAMES, 20 Dumbarton road, Glasgow,	20 Dec., 1892
SMITH, JAMES A., Union Bank house, Virginia place, Glasgow,	18 Dec., 1894
SMITH, JAMES S., c/o Miss Montgomerie, 121 Kenmure street, Pollokshields, Glasgow,	22 Nov., 1898
SPALDING, WILLIAM, 532 St. Vincent street, Glasgow,	25 Oct., 1892
SPERRY, AUSTIN, 2100 Pacific avenue, San Francisco, U.S.A.,	23 Mar., 1897
STARK, JAMES, Messrs Swan and MacLaren, Penang, Straits Settlements,	22 Dec., 1891
STEEL, JAMES, 34 Old Broad street, London, E.C.,	26 Jan., 1892
STEELE, DAVID J., Davaar, Albert drive, Pollokshields, Glasgow,	20 Dec., 1898
STEVEN, DAVID M., 18 Sandyford place, Glasgow,	15 June, 1898

STEVEN, J. M., 2 Hampton Court terrace, Glasgow, 20 Dec., 1892
STEVEN, JOHN A., 12 Royal crescent, Glasgow, 22 Nov., 1881
STEVENS, CLEMENT H., c/o Messrs Blandy Bros. & Co., Las Palmas, Grand Canary, 22 Dec., 1891
STEVENSON, ARCHIBALD, Yloilo, Philippine Islands, 25 Apr., 1893
STEVENSON, GEORGE, Hawkhead, Paisley, 22 Nov., 1898
STEVENSON, WILLIAM, Bank Chambers, Sandhill, Newcastle-on-Tyne, 25 Jan., 1881
STEWART, HENRY, 26 Evelyn avenue, Bloomfield, Belfast, 26 Oct., 1897
STIRLING, ANDREW, Messrs Denny & Co., Engine works, Dumbarton, 21 Dec., 1875
STOVE, THOMAS R., 26 Feb., 1895
SWAN, JAMES, Arcadia street, Dorchester, Mass., U.S A., 23 Mar., 1897
SYMINGTON, JAMES R., Dardene, Kilmalcolm, 21 Dec., 1886

TAYLOR, J. F., c/o Young, 300 Duke street, Glasgow, 23 Nov., 1897
THOMSON, AMBROSE H., Surveyors' Department, Court house, Marylebone lane, London, W., 24 Mar., 1891
THOMSON, FREDERICK, 18 Westbank terrace, Hillhead, Glasgow, 26 Jan., 1892
THOMSON, GRAHAM H., Jun., 2 Marlborough terrace, Glasgow, 22 Feb., 1898
THOMSON, JAMES, Hayfield, Motherwell, 20 Nov., 1894
TOD, PETER, Messrs C. & H. Crichton & Company, Engineers, Victoria road, Liverpool, 27 Oct., 1885
TOD, WILLIAM, c/o Miss Granger, 24 St Vincent crescent, Glasgow, 22 Feb., 1898
TURNBULL CAMPBELL, 39 Victoria street, Westminster, London, 27 Oct., 1891
TURNBULL, JAMES, Hillcrest, Mansion-house road, Langside, Glasgow, 22 Mar., 1892
TURNBULL, W. L., 18 Blythswood square, Glasgow, 27 Oct., 1891
TURPIN, C., 874 Govan road, Govan, 23 Nov., 1897

WALKER, G. UNDERWOOD, 56 Woodhead street, Dunfermline, 21 Mar., 1893
WALKER, JOHN, 1 Church road, Ibrox, Glasgow, 20 Nov., 1894
WALLACE, JOHN, Jun., 12 Kelvingrove street, Glasgow, 26 Jan., 1892
WALLACE, JOHN, 224 Meadowpark street, Glasgow, 21 Feb., 1899

WANNOP, CHARLES H., Messrs Barclay, Curle & Co., Limited. Finnieston quay, Glasgow, 24 Feb., 1885
WATSON, JOHN, c/o Alexander Fleming, Esq., 9 Woodside crescent, Glasgow, 22 Nov., 1898
WATSON, ROBERT, 2 Glencairn drive, Pollokshields, Glasgow, 22 Mar., 1881
WATT, HARRY, 2 Cambridge terrace, Pollokshields, Glasgow, 20 Dec., 1892
WATT, ROBERT D., Messrs Butterfield & Swire, French Bund, Shanghai, China, 27 Apr., 1880
WEDDELL, ALEXANDER H., Park villa, Uddingston, 22 Dec., 1896
WELSH, GEORGE MUIR, 3 Princes gardens, Dowanhill, Glasgow, 21 Dec., 1897
WEMYSS, GEORGE B., 57 Elliot street, Hillhead, Glasgow, 28 Nov., 1882
WHARTON, FRED., 17 Moorfield road, W. Didsbury, Manchester, 26 Oct., 1897
WHITE, HEDLEY G., 3 Glenan gardens, Helensburgh, 24 Jan., 1899
WHITEHEAD, JOHN, Eccleston, Wallace st., Kilmarnock, 18 Dec., 1883
WHITTELSEY, HENRY N., 33 Substation, New York, 23 Mar., 1897
WILSON, JOHN H., 4 Underwood, Paisley, 27 Oct., 1896
WOODS, JOSEPH, 4 Selborne gardens, York road, Ilford, London, 25 Feb., 1896
WRIGHT, ROBERT, c/o Hepple, 17 Co-operative terrace, Sunderland, 26 Oct., 1897
WRIGHT, THOMAS B., 2 Berkeley terrace, Glasgow, 20 Dec., 1898

YOUNG, JOHN, Jr., Fernbank, Kirkintilloch, 23 Nov., 1897

INDEX.

	Page
Abstract of House Expenditure Account, ...	392
Accessibility of Feed-Water Filters, ...	117
Accuracy of Tchebycheff's Rule, ...	179
Additions to Library, ...	394
Address, Inaugural, ...	93
Agnew, George Alexander, Memoir of, ...	402
Analysis of Muntz Metal, ...	81
Anniversary Dinner, ...	361
Application of Tchebycheff's Rule, ...	180
Architecture of Metals, Internal, ...	75
Aron's Electric Current Meter, ...	151
Auld, David, Memoir of, ...	402
Auxiliary Pump, ...	280
Balance Sheet, ...	390
Bastian's Electric Current Meter, ...	148
Board of Trade Unit, ...	146
Boiler Evaporation, ...	58
Boiler, "Weir,"	17
Boilers, Marine return tubular, ...	280
Boilers, Water-tube, Combustion in, ...	12
Books added to Library, ...	394
Brazing, Deterioration of, ...	83
Caisson, Description of, ...	271
Calibration of Electric Meters, ...	153
Centrifugal Force, ...	232
,, Machine, Mechanics of, ...	232
Charges for Electric Energy, ...	156
Chatsworth, Excursion to, ...	91
Circulating Pump, ...	283
Clockwork Meters, Electric Current, ...	151
Combustion, ...	14, 44
,, in Water-tube Boilers, ...	12

PAGE

Committee, Reception, ... I

Comparisons of Similar Structures and Machines—by Professor ARCHIBALD BARR, D.Sc. 322

Strength of Similar Structures, ... 327

Deformation of Structures, ... 329

Influence of Weight of Structures, ... 332

Stability of Structures, ... 341

Suspension of Bodies in Fluids, ... 344

Powers and Weights of Similar Engines, ... 348

Discussion, ... 351

Contents, ... v.

Correspondence—

A Member—The Mechanics of the Centrifugal Machine, 252.—Mr J. Rennie Barnett—Tchebycheff's Formula, 204.—Mr George H. Baxter—Mechanics of the Centrifugal Machine, 305, 313, 316, 317, 320.—Mr W. Crockatt—Feed-Water Filters, 127.—Messrs Gwynne & Co.—Mechanics of the Centrifugal Machine, 312, 314, 316, 317.—Mr Anthony Harris—Feed-Water Filters, 133.—Mr W. Hök—Tchebycheff's Formula, 205.—Mr Joseph Jonas—Decimal System of Weights and Measures, 367.—Mr J. H. Macalpine—Formation of Hailstones, 354, 356.—Mr C. A. Matthey—Mechanics of the Centrifugal Machine, 257; Meters and Systems of charging for Electric Energy, 172.—Mr E. Odagiri—Feed-Water Filters, 130.—Prof. John Perry—Transmission of Heat, 63.—Prof. Osborne Reynolds—Formation of Hailstones, 355.—Mr William Rigg—Feed-Water Filters, 130.—Mr F. J. Rowan—Combustion in Water-Tube Boilers, 22; Transmission of Heat, 61.—Mr Nisbet Sinclair—Feed-Water Filters, 121.—Mr James Syme—Feed-Water Filters, 129.—Watt's letters—Decimal System of Weights and Measures, 369.—Mr James Weir—Four-Crank Engines, 219.

Council Report, ... 385

Culverts, Dock, ... 275

Deceased Members, ... 402

Deformation of Structures, ... 329

Design, Property in, ... 104

Deterioration of Brazing, ... 83

Dinner, Anniversary, ... 361

PAGE

Dinner Institution, at Sheffield, ... 86

Discussion on Papers—

Remarks by Mr James Andrews—Four-crank Engines, 223.—Professor J. O. Arnold—Internal Architecture of Metals, 84.—Mr William Arnot—Meters and Systems of Charging for Electric Energy, 173.—Professor A. Barr—Combustion in Water-tube Boilers, 27; Transmission of Heat, 69; Tchebycheff's Formula, 199; Mechanics of the Centrifugal Machine, 254, 255, 257; Similar Structures and Machines, 357.—Mr George H. Baxter—Graving Dock Machinery, 304.—Mr A. S. Biggart—Graving Dock Machinery, 292, 305.—Professor J. H. Biles—Tchebycheff's Formula, 207.—Mr Robert Caird—Tchebycheff's Formula, 190, 196, 202.—Mr J. D. Cormack—Meters and Systems of Charging for Electric Energy, 169.—Mr Sinclair Couper—Combustion in Water-tube Boilers, 31; Feed-water Filters, 139.—Mr James Gilchrist—Internal Architecture of Metals, 84.—Mr G. Gretchin—Combustion in Water-tube Boilers, 23.—Mr George Halliday—Combustion in Water-tube Boilers, 27; Transmission of Heat, 70.—Mr T. A. Hayward—Graving Dock Machinery, 292.—Mr J. R. Jack—Tchebycheff's Formula, 197.—Professor A. Jamieson—Meters and Systems of Charging for Electric Energy, 166; Mechanics of the Centrifugal Machine, 253, 255.—Mr Charles C. Lindsay—Graving Dock Machinery, 292.—Mr W. J. Luke—Tchebycheff's Formula, 192.—Mr J. H. Macalpine—Similar Structures and Machines, 352, 358, 359.—Mr C. A. Matthey—Transmission of Heat, 66; Mechanics of the Centrifugal Machine, 255.—Mr H. A. Mavor—Meters and Systems of Charging for Electric Energy, 171.—Mr James B. Mercer—Internal Architecture of Metals, 84.—Mr James Mollison—Combustion in Water-tube Boilers, 24; Internal Architecture of Metals, 84; Feed-water Filters, 139.—Mr D. H. Morton—Graving Dock Machinery, 295.—Mr R. T. Napier—Transmission of Heat, 68; Feed-water Filters, 141; Tchebycheff's Formula, 198; Mechanics of the Centrifugal Machine, 254, 257; Similar Structures and Machines, 351—Mr Matthew Paul—Combustion in Water-Tube Boilers, 31; Four-Crank Engines, 221.—Mr F. P. Purvis—Tchebycheff's Formula, 196.—Prof. W. Ripper—Combustion in Water-Tube Boilers, 25.—Mr F. J. Rowan

PAGE

—Feed-Water Filters, 136 —Mr A. E. Shute—Feed-Water Filters, 142.—Mr C. E. Stromeyer—Combustion in Water-Tube Boilers, 26; Transmission of Heat, 66.—Mr G. W. Thode—Combustion in Water-Tube Boilers, 33; Mr John Thom—Combustion in Water-Tube Boilers, 29; Feed-Water Filters, 140; Four-Crank Engines, 221, 227.—Mr E. George Tidd—Meters and Systems of Charging for Electric Energy, 169.—Mr W. C. Warden—Four-Crank Engines, 222.—Prof. W. Watkinson—Combustion in Water-Tube Boilers, 30; Transmission of Heat, 65; Feed-Water Filters, 141; Similar Structures and Machines, 351.—Mr James Weir—Combustion in Water-Tube Boilers, 37; Feed-Water Filters, 140.

Dock Culverts, ... 275
,, Dimensions of Clyde Trustees' No. 3 Graving, ... 267
,, Division gates, ... 269
,, Equipment, ... 268
,, Pumping Machinery, ... 277
,, ,, ,, performance of 284
Donations to the Library, ... 393

Electric Current Meter, Edison's, ... 147
,, ,, ,, Lowrie Hall's, ... 148
,, ,, ,, Bastian's, ... 148
,, ,, ,, Ferranti's, ... 148
,, ,, ,, Hookham's 149
,, ,, ,, Elihu Thomson's 150
,, ,, ,, Shallenberger's, ... 151
,, ,, ,, Perry's, ... 151
,, ,, ,, Aron's, ... 151
,, ,, ,, Lord Kelvin's 152
Electric Energy, Charges for, ... 156
Engineering Progress, ... 95
Engines, Four-crank, ... 213
,, Inverted, direct-acting, ... 279
,, Powers and Weights of similar, ... 348
Examples of Four-crank Engines and their Auxiliaries—by Mr JOHN THOM, ... 213
"Parole" type of Valves, ... 213
Results of Trials, ... 217
Discussion, ... 221

PAGE
Excursion to Haddon Hall and Chatsworth, ... 91
,, Welbeck Abbey, ... 91
Exhibitions, International, ... 100
Expenditure and Income Account, ... 388

Fans, ... 282
Feed-Pumps, ... 284
Feed Water Filters—by Mr A. E. SHUTE, ... 109
Filter deposit, ... 110
Types of Filters, ... 113, 117
Area of Filtering medium, ... 115
Space occupied, ... 117
Accessibility, ... 117
Discussion, ... 136
Ferranti's Electric Current Meter, ... 148
Financial Statement, ... 388
Findlay, Edward Walton, Memoir of, ... 403
Fluids, Suspension of bodies in, ... 344
Formula, M. Tchebycheff's, ... 176
Four-crank engines, ... 213
,, ,, Results of trials of, ... 217
Furnace gases, ... 42
,, temperature, ... , ... 44

Goodfellow, Joseph, Memoir of, ... 405
Graham, George, ,, ,, ... 406
Graving Dock Machinery, ... 267
Gray, William, Memoir of, ... 411
Gyroscope, Properties of, ... 245

Haddon Hall, Excursion to, ... 91
Harvey, Charles Randolph, Memoir of, ... 408
Heat, Transmission of, ... 48
Heating Surface, ... 16
Hookham's Electric Current Meter, ... 149
House Expenditure Account, Abstract of, ... 392
Hydraulic Power, ... 276

Inaugural Address—by the PRESIDENT, ... 93
Engineering progress, ... 95
International Exhibitions, ... 100

PAGE
Property in design, ... 104
Income and Expenditure Account, ... 3[illegible]
Influence of weight of structures, ... 332
Institution Dinner at Sheffield, ... 86
Institution, Papers read before the, ... 12, 41, 75, 93, 109, 146, 176, 213, 232, 267, 322
ntercrystalline cohesion, ... 75

"James Watt" Anniversary Dinner, ... 361

Laing, William, Memoir of, ... 4[illegible]
Libraries, etc., which receive the Institution Transactions, ... 3[illegible]
Library, Books added to, ... 394
,, Committee, Report of, ... 395
,, Donations to, ... 393
,, Periodicals received at, ... 39[illegible]
,, Recommendation Book, ... 4[illegible]
List of Members, ... 413
List of Office-Bearers, ... iii.
Local Reception Committee at Sheffield, ... 1
Lord Kelvin's Electric Current Meter, ... 152
Lowrie Hall's ,, ,, ,, ... 14[illegible]

Machinery, Performance of, ... 284
,, Pumping, ... 27[illegible]
Mechanical Properties of Steel, ... 79
Members, List of, ... 413
Membership Subscription Rates, ... 40[illegible]
Memoirs of Deceased Members, ... 40[illegible]
Menzies, William, Memoir of, ... 40[illegible]
Minutes of Proceedings, ... 37[illegible]
Meters and Systems of Charging for Electric Energy—by Mr Wm. Arnot, ... 146
Board of Trade Unit, ... 146
Types of Meters, ... 147
Calibration of Meters, ... 153
Charges for Electric Energy, ... 156
Discussion, ... 166
Murdoch, James, Memoir of, ... 410
Muntz Metal, Micrographic Analysis of, ... 81

PAGE
New Books added to the Library, ... 393, 394

Obituary, ... 402
Office-Bearers, ... iii.
On M. Tchebycheff's Formula, by Professor J. HARVARD BILES, ... 176
Simpson's Rules, ... 177
Trapezoidal Rule, ... 178
Accuracy of Tchebycheff's Rule, ... 179
Application of ,, ,, ... 180
Discussion, ... 190

Papers read, ... 12, 41, 75, 93, 109, 146, 176, 213, 232, 267, 322
"Parole" type of Valves, ... 213
Performance of Machinery, ... 284
Periodicals received at the Library, ... 399
Perry's Electric Current Meter,... 151
Portrait Album, ... 400
Powers and Weights of similar Engines, ... 348
Premiums for Papers, ... vii.
Presidents of the Institution, ... iv.
Proceedings, Minutes of, ... 372
Programme of Proceedings at Sheffield, ... 4
Pumping Machinery, ... 277
Pumps and Connections, ... 277

Reception Committee at Sheffield, ... 1
Reception of Members and Friends in Town Hall, Sheffield, ... 91
,, ,, President and Council at Sheffield, ... 9
Report of the Council, ... 385
,, of the Library Committee, ... 393

Shallenberger's Electric Current Meter, ... 151
Similar Engines, Powers and weights of, ... 348
Simpson's Rules, ... 177
Societies exchanging Transactions with the Institution, ... 396
Steam and Exhaust Pipes, ... 283
,, Travelling Crane, ... 277
Steel, Mechanical properties of, ... 79
Strength of Similar Structures, ... 327
Structures and Machines, Similar, ... 322
,, Deformation of, ... 329
,, Influence of Weight of, ... 332

PAGE
Structures, Stability of, ... 341
,, Strength of similar, ... 327
Summer Meeting at Sheffield, ... 1
,, ,, Programme, ... 4
,, ,, Proceedings, ... 9
Suspension of Bodies in Fluids,... 344

Tait, James, Memoir of, ... 410
Tank for Feed-pump, ... 284
Tchebycheff's Formula, ... 176
The Internal Architecture of Metals—by Professor JOHN OLIVER ARNOLD, ... 75
Intercrystalline Cohesion, ... 75
Mechanical Properties of Steel, ... 79
Micrographical Analysis of Muntz Metal, ... 81
Deterioration of Brazing, ... 83
Discussion, ... 84
The Machinery of the Clyde Trustees' No 3 Graving Dock—by Mr GEORGE H. BAXTER, ... 267
Equipment, &c., ... 268
Pumping Machinery, ... 277
Engines, ... 279
Boilers and Accessories, ... 280
Performance of Machinery, ... 284
Discussion, ... 292
The Mechanics of the Centrifugal Machine—by Mr C. A. MATTHEY, 232
Measurement of Centrifugal Force, ... 238
Large *versus* Small Machines, ... 240
"Weston" machine, ... 242, 249
Properties of the Gyroscope, ... 245
Discussion, ... 253
The Problem of Combustion in Water-tube Boilers, and a means of its Solution—by Mr JAMES WEIR, ... 12
Combustion, ... 14
Heating Surface, ... 16
"Weir" Water-Tube Boiler, ... 17
Absence of Smoke, ... 19
Suitability of "Weir" Boiler for burning any kind of Coal, .. 20
Discussion, ... 23
The Transmission of Heat through Plates from Hot Gases to Water—by Mr GEORGE HALLIDAY, Wh.Sc., ... 41

PAGE
Furnace Gases, ... 42
,, Temperature, ... 44
Combustion, ... 44
Transmission of Heat, ... 48
Boiler Evaporation, ... 58
Discussion, ... 65
Trapezoidal Rule, ... 178
Treasurer's Statement, ... 389

Valves, "Parole" type, ... 213
Visits to Works at Sheffield, ... 90

Water-Tube Boilers, Combustion in, ... 12
"Watt" Anniversary Dinner, ... 361
Weight of Structures, Influence of, ... 332
"Weir" Water-Tube Boiler, ... 17
Welbeck Abbey, Excursion to, ... 91
"Weston" Centrifugal Machine, ... 242, 249
Wilson, John, Memoir of, ... 411

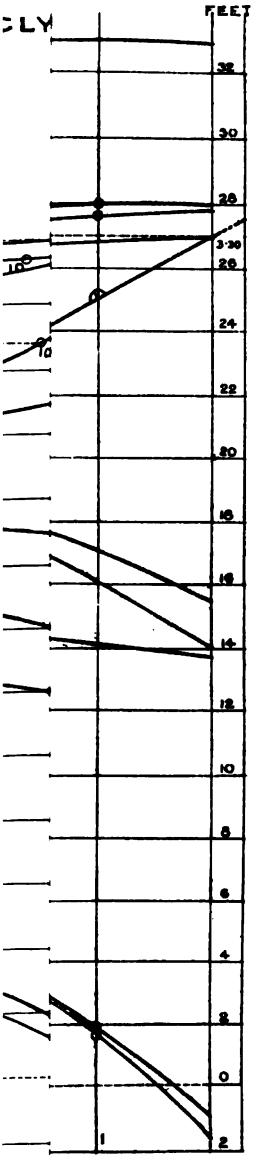

A *Quantity of Water in Dock at any level.*

B *Quantity of Water discharged by two 60" pumps, in thousands of cubic feet per minute.*

C *Velocity through two 60" pipes, in feet, per second.*

D *Fall of tide during period of pumping.*

E *Additional head to be allowed for friction in pipes in calculating Water Horse Power.*

F NOTE: *The distance measured vertically between lines* **A** *and* **E**, *from any point in the former, will give, for the corresponding time, the total head of water then being pumped against.*

G *Mean Indicated Horse Power during intervals of 10 minutes each.*

H *Mean Water Horse Power.*

J *Mean combined efficiency of Pumps and Engines.*

K *Mean Pressure on each engine.*

L *Mean Revolutions per minute during intervals of 10 minutes each.*

TRIAL ON 28th FEBRUARY, 1899.

This trial took place under ordinary conditions of working.

Four boilers were used, without induced draught.

Feed Water temperature, 190°. *Fahr.,*

Coal consumed during Trial was 79½ *cwts. after steam had been raised to* 90 *lb. per square inch.*

Steam was well maintained throughout the trial.

Draught of Water at starting, 27 *feet inside.* 27 *feet outside. Dock emptied in* 90 *minutes.*

ROBERT GARDNER & Co.
ENGINEERING LITHOGRAPHERS, GLASGOW

2.

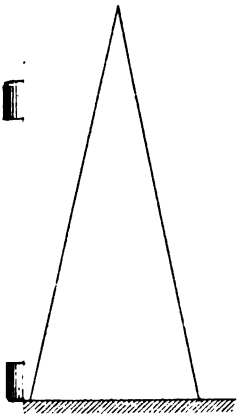

Fig. 13.

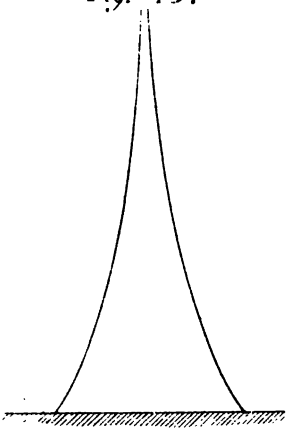

Fig. 19.

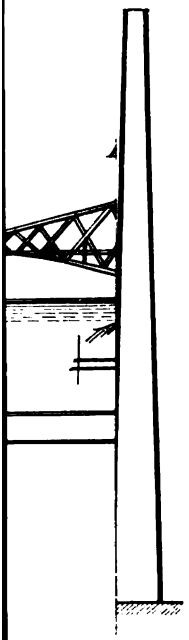

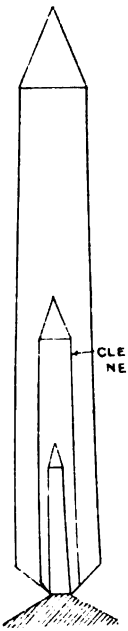

Fig. 20.

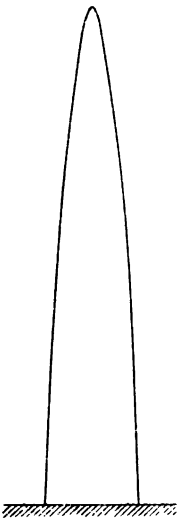

ROBERT GARDNER & Co.
ENGINEERING LITHOGRAPHERS, GLASGOW.